Buntsford Hill Business Park, Bromsgrove, Worcestershire B60 3DX England
Telephone: **+44 (0)1527 835555** Facsimilie: **+44 (0)1527 831111**
Web: **http://www.fuel-parts.co.uk**

Carburettor Service Kits

This page is intentionally blank

CARBURETTOR SERVICE KITS

Vehicle	Page
Product Details	7

Automotive Applications

Vehicle	Page
Alfa Romeo	9
AMC Jeep	9
Audi	9
Austin Rover	10
AutoBianchi	10
Bedford	10
BMW	11
Caterham	11
Citroen	11
Citroen Commercial	12
Dacia	12
Daihatsu	12
Fiat	12
Fiat Commercial	14
Ford	14
Ford Commercial	16
FSO Polski Fiat	16
Hillman	16
Honda	16
Hyundai	16
Jaguar	16
Lada	16
Lancia	16
Land Rover	17
Leyland	17
Lotus	17
Maserati	17
Mazda	17
Mazda Commercial	18
Mercedes	18
Mercedes Commercial	18
MG	18
Mitsubishi	18
Mitsubishi	18
Morgan	18
Nissan - Datsun	18
Nissan Commercial	19
Opel	19
Peugeot	20
Peugeot Commercial	21
Porche	21
Renault	21
Renault Commercial	22
Rover (see Austin Rover)	22
SAAB	22
Seat	22
Skoda	23
Subaru	23
Suzuki	23
Talbot	23
Toyota	24
Toyota Commercial	24
Triumph	24
Vauxhall	25
VW	26
VW Pick-Up	27
Volvo	27
Zastava - Yugo	27

Marine Applications 28

Manual Choke Conversion Kits 31

This page is intentionally blank

Carburettor

WHAT THEY DO:

Controls the fuel air mixture, through all operating conditions, to the engine.

FAILURE SYMPTOMS:

Poor fuel consumption, poor engine performance and rough running.

MAINTENANCE/SERVICE:

Check tail pipe emissions at each service interval. Check and adjust idle speed, mixture and choke operation. Clean, replace float needle and diaphragms every 30,000 miles.

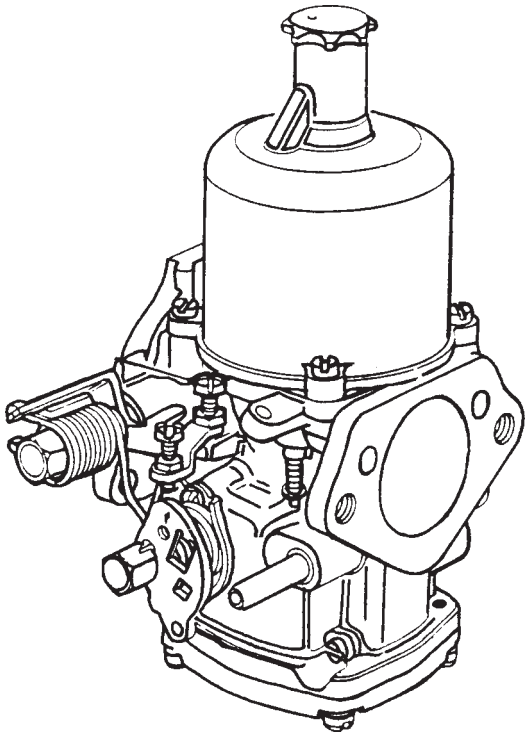

Contact Fuel Parts UK for prices and availability on service kits and components.
Please ensure you have full vehicle application details when calling for prices, including :
Make, Model, Year, Engine Size, type of Carburettor fitted.

This page is intentionally blank

Carburettor Service Kits Applications

MAKE	MODEL	YEAR	CARB MODEL	CHOKE	KIT NO.	INC. DIAPHRAGM
ALFA ROMEO						
ALFA ROMEO	ARNA 1186cc	83	SOLEX 32 DIS 40	M	I092	
ALFA ROMEO	ARNA 1186cc	83	WEBER 32 ICE 250	M	W175	
ALFA ROMEO	ARNA 1200	83	WEBER 32 DIR 51A	M	W177	W177.1
ALFA ROMEO	ARNA 1.3 - 1.5	84	WEBER 2x36 IDF	M	W367	
ALFA ROMEO	ALFA 33 1300	79	SOLEX 32 EIES 44	M	I087	
ALFA ROMEO	ALFA 33 1300	83	WEBER 32 DIR 91/151	M	W250	W250.2
ALFA ROMEO	ALFA 33 1.3 S - 1500 - 4WD	84	WEBER 2x36 IDF	M	W367	
ALFA ROMEO	QUAD	84	DELLORTO 2x36 DRLA	M	D011	
ALFA ROMEO	ALFA 33 1.7	86	WEBER 2x40 IDF	M	W555	
ALFA ROMEO	QUAD	86	DELLORTO 2x40 DRLA	M	D012	
ALFA ROMEO	GIULIA 1.3 Ti - 1.6 Ti	70	SOLEX 32 PAIA	M	I007	
ALFA ROMEO	GIULIA SUPER GT 1.3 - 1.6	76	SOLEX 2x40 DDH	M	I064	
ALFA ROMEO	1750 - ALFETTA 1.8	76	WEBER 2x40 DCOE	M	W004	
ALFA ROMEO	1750 - ALFETTA 1.8	76	DELLORTO 2x40 DHLA	M	D010	
ALFA ROMEO	GIULIETTA 1.3 - 1.6 - 1.8	80	SOLEX 2x40 ADDHE	M	I096	
ALFA ROMEO	ALFETTA 2.0 - SPIDER 2.0	80	WEBER 2x40 DCOE	M	W004	
ALFA ROMEO	ALFETTA 2.0 - SPIDER 2.0	80	DELLORTO 2x40 DHLA	M	D010	
ALFA ROMEO	GIULIETTA 1.8 - 2.0 3	83	SOLEX 2x40 ADDHE	M	I096	
ALFA ROMEO	GIULIETTA 1.8 - 2.0 3	83	WEBER 2x40 DCOE	M	W004	
ALFA ROMEO	GIULIETTA 1.8 - 2.0 3	83	DELLORTO 2x40 DHLA	M	D013	
ALFA ROMEO	ALFA 90	85	SOLEX 2x40 ADDHE	M	I096	
ALFA ROMEO	ALFA 90	85	WEBER 2x40 DCOE	M	W004	
ALFA ROMEO	ALFA 90	85	DELLORTO 2x40 DHLA	M	D013	
ALFA ROMEO	ALFA 75 1.6	85	WEBER 2x40 DCOM	M	W545	
ALFA ROMEO	ALFA 75 1.6	85	DELLORTO 2x40 DHLA	M	D014	
ALFA ROMEO	ALFA SUD 1.2	74	SOLEX 32 DISA 21	M	I061	
ALFA ROMEO	ALFA SUD 1.2	74	WEBER 32 ICE 250	M	W175	
ALFA ROMEO	ALFA SUD 1.2	74	DELLORTO 32 FRD	M	D015	
ALFA ROMEO	ALFA SUD 1.3 S - L 5M	78	SOLEX 32 DIS 41	M	I092	
ALFA ROMEO	ALFA SUD Ti 1.2	77	SOLEX 32 EIES 43-44	M	I087	
ALFA ROMEO	ALFA SUD Ti 1.2	77	WEBER 32 DIR 41	M	W177	W177.1
ALFA ROMEO	ALFA SUD Ti 1.2 - 1.3	80	SOLEX 32 EIES 43-44	M	I087	
ALFA ROMEO	1350 Ti - 1490 Ti		WEBER 32 DIR 71/250	M	W176	W176.1
ALFA ROMEO	ALFA SUD SUPER 1.5	83	WEBER 32 DIR 91/151	M	W250	W250.2
ALFA ROMEO	ALFA SUD SPRINT 1.3 - 1.5	81	WEBER 32 DATRA 21	A	W355	W355.1
ALFA ROMEO	ALFA SUD Ti	78	WEBER 2x40 IDF	M	W555	
ALFA ROMEO	ALFA SUD SPRINT 105 cv	84	WEBER 2x36 IDF	M	W367	
AMC JEEP						
AMC JEEP	JI0 - J20 - CHEROKEE 6 cyl.	81	CARTER BBD1 1/4	A	C160	
AUDI						
AUDI	NSU PRINZ		PIERBURG 34 PCI	M	G021	
AUDI	AUDI 50 LS - GL		PIERBURG 31 PICT 5	A	G003	
AUDI	AUDI 50 GLS		PIERBURG 34 PIC 5	M	G003	
AUDI	AUDI 80 L - 80 S - 80 LS	80	PIERBURG 35 PDSIT 5	A	G001	
AUDI	AUDI 80 GL - 90	75	PIERBURG 32 DIDTA	A	G004	
AUDI	AUDI 80 L - 80 S	81	PIERBURG 36 1 B3	A	G005	
AUDI	AUDI 80 GL	76	PIERBURG 32/35 TDID	A	G007	
AUDI	AUDI 80 GLS	82	PIERBURG 2B2 - 2B5	A	G006	
AUDI	AUDI 80 GLS - 80 COUPE	82	PIERBURG 28/30 2E2	A	G044	
AUDI	AUDI 1921cc COUPE	81-84	WEBER CONV. 34 DAT	A	W526	
AUDI	AUDI 100 LS	76	PIEREBURG 32/35 TDID	A	G007	
AUDI	AUDI 100 S	82	PIERBURG 2B2 - 2E35	A	G006	
AUDI	AUDI 100	82	PIERBURG 36 1 B3	A	G005	
AUDI	AUDI 100	83	PIERBURG 28/30 2E2	A	G044	
AUDI	AUDI 80 1272 -1595cc	81	KEIHIN	A	J751	
AUDI	AUDI 80 1297cc	72-78	WEBER CONV. 34 ICH	M	W288	
AUDI	AUDI 80 1272cc	78-79	WEBER CONV. 34 ICH	M	W288	
AUDI	AUDI 80 1471cc	74-75	WEBER CONV. 34 ICH	M	W288	
AUDI	AUDI 80 1588cc	75-79	WEBER CONV. 34 ICH	M	W288	

Carburettor Service Kits Applications

MAKE	MODEL	YEAR	CARB MODEL	CHOKE	KIT NO.	INC. DIAPHRAGM
AUDI	AUDI 80 1595cc	83-86	WEBER CONV. 32/34 DMTL	M	W561	W561.1
AUDI	AUDI 80 1595cc	83-86	WEBER CONV. 32/34 DMTL	M	W561	W561.1
AUDI	AUDI 80 1781cc	82	WEBER CONV. 32/34 DMTL	M	W561	W561.1
AUDI	AUDI 80 1781cc	82	WEBER CONV. 32/34 DMTL	M	W561	W561.1
AUDI	AUDI 80 1921cc	81-84	WEBER CONV. 32/34 DMTL	M	W561	W561.1
AUDI	AUDI 100/5 1800 cc	82	KEIHIN	A	J751	
AUDI	AUDI 80 S COUPE-T 1800cc	86	KEIHIN	A	J755	
AUSTIN ROVER						
AUSTIN ROVER	ALLEGRO 1000	82	S.U. HIF 38	M	S005	
AUSTIN ROVER	ALLEGRO 1100 - 1300	76	S.U. HS4	M	S001	
AUSTIN ROVER	ALLEGRO 1100 - 1300	82	S.U. HS4 CAPSTAT	M	S003	
AUSTIN ROVER	ALLEGRO 1500	75	S.U. HS6	M	S002	
AUSTIN ROVER	ALLEGRO 1500	82	S.U. HS6 CAPSTAT	M	S006	
AUSTIN ROVER	ALLEGRO 1500 TC	82	S.U. HIF 4x2	M	S009	
AUSTIN ROVER	ALLEGRO 1750-HL -SPORT	82	S.U. HS6	M	S002	
AUSTIN ROVER	ALLEGRO 1750 -HL-SPORT	82	S.U. HS6 CAPSTAT	M	S004	
AUSTIN ROVER	MAESTRO 1.3 L - 1.6 L	83	S.U. HIF 44	A	S010	
AUSTIN ROVER	MAESTRO 1.6	84	WEBER 40 DCNF	A	W556	
AUSTIN ROVER	MAXI 1500 - 1750	82	S.U. HS6 CAPSTAT	M	S006	
AUSTIN ROVER	METRO 1000 - 1000 CL -HLE	80	S.U. HIF 38	M	S005	
AUSTIN ROVER	METRO 1300	80	S.U. HIF 44	M	S010	
AUSTIN ROVER	METRO 1.1	90-93	S.U. KIF 38	M	S013	
AUSTIN ROVER	METRO 1.4 (8 VALVE)	90-93	S.U. KIF 44	M	S014	
AUSTIN ROVER	MINI MKI - MKII 850 - 1000	76	S.U. HS2 - HS4	M	S001	
AUSTIN ROVER	MINI 850 - 1000 - 1100 - 1275	80	S.U. HS4 CAPSTAT	M	S003	
AUSTIN ROVER	MINI COOPER MKI - MKII	71	S.U. HS 2x2	M	S002	
AUSTIN ROVER	MONTEGO 1.3 L - 1.6 L	84	S.U. HIF 44	A	S010	
AUSTIN ROVER	PRINCESS 1700-2000-2200	81	S.U. HS6 CAPSTAT	M	S006	
AUSTIN ROVER	PRINCESS 1800	76	S.U. HS6	M	S002	
AUSTIN ROVER	PRINCESS 1800	79	S.U. HS6 CAPSTAT	M	S004	
AUSTIN ROVER	1100 - 1300 MKI - MKII - MKIII	74	S.U. HS4	M	S001	
AUSTIN ROVER	1300 GT	74	S.U. HS 2x2	M	S001	
AUSTIN ROVER	ROVER 213 1342cc	84	KEIHIN DA76B	A	J750	
AUSTIN ROVER	ROVER 214 (8 VALVE)	90-92	S.U KIF 44	M	S014	
AUSTIN ROVER	ROVER 216 (8 VALVE)	85-89	S.U HIF 44	M	S010	
AUSTIN ROVER	ROVER 800 (8 VALVE)	87-90	S.U. HIF 44	M	S010	
AUSTIN ROVER	2000 SC 1978cc	73	S.U. HS6	A	S002	
AUSTIN ROVER	2000 1994 cc	82	S.U. HIF 44	A	S010	
AUSTIN ROVER	2200 SC - TC 2205cc	77	S.U. HIF 6	A	S007	
AUSTIN ROVER	2300 2351cc	81	S.U. HS6	A	S002	
AUSTIN ROVER	2300 2351cc	82	S.U. HIF 44	A	S010	
AUSTIN ROVER	2600 2597cc	81	S.U. HS6	A	S002	
AUSTIN ROVER	2600 2597cc	82	S.U. HIF 44	A	S010	
AUSTIN ROVER	3500 3528cc	72	S.U. HS6	A	S002	
AUSTIN ROVER	3500 V8 3528cc	81	S.U. HIF 6	A	S007	
AUSTIN ROVER	SHERPA 200-230-250-255	79	S.U. HIF 6	M	S007	
AUSTIN ROVER	SHERPA 200-230-250-255	81	S.U. HIF 44	M	S010	
AUSTIN ROVER	SHERPA 185 - 215-220-240	74	S.U. HS6 CAPSTAT	M	S006	
AUTOBIANCHI						
AUTOBIANCHI	BIANCHINA 499cc	69	WEBER 26 OC	M	W010	
AUTOBIANCHI	A 111	69	WEBER 32 DFB 1	M	W012	
AUTOBIANCHI	A112 903cc	83	SOLEX 30 Di 40	M	I077	
AUTOBIANCHI	A112 E - A 112 JUNIOR	83	WEBER 30 e 32 IBA	M	W382	
AUTOBIANCHI	A112 ABARTH 70 HP	83	WEBER 32 DMTR	M	W179	
AUTOBIANCHI	Y10 FIRE 999cc	85	WEBER 32 TLF	M	W521	
AUTOBIANCHI	Y10 TOURING 1050cc	85	WEBER 32 ICEV 55	M	W374	W374.1
AUTOBIANCHI	Y10 TURBO	85	WEBER 30/32 DMTR	M	W528	
BEDFORD						
BEDFORD	ASTRA VAN FWD 1297cc	83	PIERBURG 36 1 B1	A	G005	
BEDFORD	BEAGLE 1256cc	80	WEBER 32 ICT	M	W260	

Carburettor Service Kits Applications

MAKE	MODEL	YEAR	CARB MODEL	CHOKE	KIT NO.	INC. DIAPHRAGM
BEDFORD	HA 6-8-10 1256cc	77	WEBER 32 ICT	M	W260	
BEDFORD	C.P.O. VAN 1256cc	79	STROMBERG 150 CDSEV	M	G037	
BEDFORD	HA CWT 1256cc	71	STROMBERG 150 CDSEV	M	G037	
BEDFORD	CA VAN 1500cc	63	WEBER 34 ICT	M	W292	
BEDFORD	CF VAN 1.6 - 1.8 - 2.0	76	ZENITH 36 IV	M	G039	
BEDFORD	CF VAN 1.6 - 1.8 - 2.0	76	WEBER 34 ICT	M	W292	
BEDFORD	CF VAN 2.3	76	ZENITH 36 IVEP	M	G049	
BMW						
BMW	1502 - 1602 - 2002	73	PIERBURG 36/40 PDSI	A	G008	
BMW	315 1600cc	81	PIERBURG 36 1 B2	A	G029	
BMW	316 - 318 - 320 - 518	77	PIERBURG 32 DIDTA	A	G009	
BMW	316 - 518	80	PIERBURG 34/34 2B4	A	G010	
BMW	316 - 518	87	PIERBURG 34/34 2BE	A	G052	
BMW	520 4 cyl. 2000cc	77	STROMBERG 2x175 CDET	A	G011	
BMW	320 - 520 6 cyl.	81	PIERBURG 32/44 4AI	A	G012	
BMW	2500 - 2800 - 3.0 - 3.3	77	ZENITH 35/40 INAT	A	G013	
BMW	525 - 528 - 630 - 720 - 730	81	PIERBURG 32/54 4AI	A	G045	
BMW	316-518 1766cc	80-83	WEBER CONV. 32-34 DMTL	M	W561	W561.1
BMW	316-518 1766cc	82	WEBER CONV. 32-34 DMTL	M	W561	W561.1
BMW	316-518 1766cc	83-88	WEBER CONV. 32-34 DMTL	M	W561	W561.1
BMW	316-518 1766cc	83-88	WEBER CONV. 32-34 DMTL	M	W561	W561.1
BMW	320 1990cc	77-83	WEBER CONV. 38 DGAS	A	W553	W553.1
BMW	320 1990cc	77-82	WEBER CONV. 38 DGAS	A	W553	W553.1
BMW	520 1990cc	77-83	WEBER CONV. 38 DGAS	A	W553	
BMW	520 1990cc	77-82	WEBER CONV. 38 DGAS	A	W553	
BMW	ALPINA 1600 - 1800 TI/SA	72	WEBER 2x40 e 45 DCOE	A	W004	
BMW	ALPINA 1600 - 1800 TI/SA	72	SOLEX 2x40 e 45 ADDHE	A	I065	
CATERHAM						
CATERHAM	SUPER 7 GT 1599 cc	77	WEBER 32 DGAV	M	W141	
CATERHAM	SUPER 7 SPRINT 1599cc	80	WEBER 2x40 DCOE	M	W004	
CATERHAM	SUPER 7 TC 1599cc	80	DELLORTO 2x40 DHLA	M	D010	
CITROEN						
CITROEN	2CV4-DYANE4AZU250-PO-AZL4	-79	SOLEX 34 PICS 4-5-6-10	M	F001	
CITROEN	600 cc DYANE 6 - AMI 6	-69	SOLEX 40 PICS 3	M	F002	
CITROEN	600 cc 2CV6 - DYANE 6	-79	SOLEX 34 PICS 4-5-6-10	M	F001	
CITROEN	MEHARI AKZ - AKS 400 -					
CITROEN	DYANE 6-ACADYANE-MEHARI	79-	SOLEX 26/35 SCIC - CSIC	M	F345	
CITROEN	AMI 8-AMI 6 LN-LNA-VISA 650cc	82-	SOLEX 26/35 CSIC	M	F346	
CITROEN	VISA SUPER E - X	-83	SOLEX 32 PBISA 7-11	M	F035	
CITROEN	VISA ECO 650 cc	82	WEBER 32/34 DMTC	M	W529	
CITROEN	VISA 11 SUPER E	-82	SOLEX 32 PBISA 12	M	F057	
CITROEN	LNA 11 E- RE	82-	SOLEX 32 PBISA 12	M	F045	
CITROEN	VISA 14 TRS	84	SOLEX 34 PBISA 12	M	F047	
CITROEN	VISA GT 1360cc	83	SOLEX 2x35 BISA 8	M	F051	
CITROEN	VISA GT 1360cc	83	WEBER 2x35 IBSH	M	W533	
CITROEN	AXEL 11 RE 1138cc	84	SOLEX 28 CIC 4	M	F008	
CITROEN	AXEL 12 TRS 1300cc	84	SOLEX 28 CIC 4	M	F008	
CITROEN	AX 10 E - 1 0 RE 950cc	87	SOLEX 32 PBISA 16	M	F060	
CITROEN	AX 10 E - 1 0 RE 950cc	87	WEBER 32 IBSH	M	W530	
CITROEN	AX 11 E - 1 1 TRE 1124cc	86	SOLEX 32 PBISA 16	M	F060	
CITROEN	AX 14	87	WEBER 34 TLP 7/200	M	W534	
CITROEN	AX GT - TZS	87	SOLEX 32/34 Z2	M	F046	
CITROEN	AX SPORT	87	SOLEX 2x40 ADDHE 52	M	I096	
CITROEN	AX SPORT	87	WEBER 2x40 DCOM	M	W545	
CITROEN	BX 11 1124cc	83	SOLEX 32 PBISA 12	M	F045	
CITROEN	BX 14 4 vit.	82	SOLEX 30/30 Z2	M	F046	
CITROEN	BX 14 E - RE 5 vit.	82	SOLEX 32/34 Z2	M	F046	
CITROEN	BX 16 RS - TRS 1580cc	86	SOLEX 32/34 Z1	A	F059	F059.1
CITROEN	BX 16 RS - TRS 1580cc	84	WEBER 32/34 DRTC	A	W379	W379.1
CITROEN	BX 16 RS - TRS 1580cc	86	WEBER 32/34 DRTM	M	W537	W537.1

Carburettor Service Kits Applications

MAKE	MODEL	YEAR	CARB MODEL	CHOKE	KIT NO.	INC. DIAPHRAGM
CITROEN	BX 19 GT - TRS 1905cc	86	SOLEX 34/34 Z1	A	F059	F059.1
CITROEN	BX 19 GT - TRS 1905cc	84	WEBER 34 DRTC	A	W379	W379.1
CITROEN	BX 19 GT - TRS 1905cc	86	WEBER 34 DRTM	M	W537	W537.1
CITROEN	BX 19 SPORT		SOLEX 2x40 ADDHE 49	M	I096	
CITROEN	GS 1015 - 1200 - 1220	-79	SOLEX 28 CIC 2-4	M	F007	
CITROEN	GS 1015 - 1200 - 1220	79-	SOLEX 28 CIC 3-4	M	F008	
CITROEN	GS X2 - X3 - GSA	79-	SOLEX 28 CIC 3-4	M	F008	
CITROEN	GS X2 - X3 - GSA	70-	WEBER 30 DGS	M	W235	
CITROEN	CX 2000 - 2200	82	SOLEX 34 CIC	M	F009	
CITROEN	CX REFLEX - ATHENA		WEBER 34 DMTR	M	W240	
CITROEN	CX 2400	82	SOLEX 34 CIC	M	F009	
CITROEN	CX 2400	82	WEBER 34 DATC	A	W511	W511.1
CITROEN COMM						
CITROEN COMM	350/450		SOLEX 34 PBIC	M	F019	
CITROEN COMM	C25		SOLEX 34 PBISA 16	M	F047	
CITROEN COMM	C35		SOLEX 32 SEI	M	F026	
DACIA						
DACIA	1397cc	84-87	WEBER CONV. 34 ICH		W288	
DAIHATSU						
DAIHATSU	CHARADE 993cc	79	AISAN	M	J207	
DAIHATSU	CHARMANT 1300cc	82	AISAN	M	J207	
DAIHATSU	CHARMANT 1600cc	82	AISAN	M	J200	
DAIHATSU	DELTA WAGON 1812cc	84	AISAN	A	J211	
DAIHATSU	DOMINO 547 cc - 617cc	83	AISAN	M	J207	
DAIHATSU	F20 1600cc	79	AISAN	A	J200	
DAIMLER						
DAIMLER	LIMOUSINE 4.2 LITRE	83	S.U. HIF 7		S008	
DAIMLER	SOVEREIGN 3.4 LITRE	78	S.U. HIF 7		S008	
DAIMLER	SOVEREIGN 4.2 LITRE	78	S.U. HIF 7		S008	
FIAT						
FIAT	1100 D	65	WEBER 32 IMPE	M	W032	
FIAT	1100 D	65	SOLEX 32 PBIC	M	I003	
FIAT	1100 R - 124 1	68	WEBER 32 DCOF	M	W117	
FIAT	1100 R - 124 1	68	SOLEX 32 PHH	M	I030	
FIAT	1100 R	68	WEBER 32 DCOF 1	M	W034	
FIAT	1500 C	65	WEBER 34 DCHD 4	M	W040	
FIAT	1500 C	65	SOLEX 34 PAIA	M	I034	
FIAT	1300 - 1500 C	65	WEBER 28/36 DCD	M	W041	
FIAT	1300 - 1500 C	65	SOLEX 34 PAIA	M	I034	
FIAT	DINO	72	WEBER 40 DCNF 12	M	W138	
FIAT	500 FL	74	WEBER 26 IMB 10	M	W008	
FIAT	500 R	74	WEBER 24 IMB 100	M	W209	
FIAT	500 GIARDINETTA	69	WEBER 26 OC	M	W010	
FIAT	600 D	69	WEBER 28 ICP	M	W021	
FIAT	600 D	69	SOLEX 28 PIB	M	I022	
FIAT	850 S - BERLINA	70	WEBER 30 ICF	M	W023	
FIAT	850 S - BERLINA	70	SOLEX 30 PIB	M	I023	
FIAT	850 COUPE - SPYDER	73	WEBER 30 DIC	M	W024	
FIAT	124 SPECIAL		WEBER 32 DHS	M	W038	
FIAT	124 SPECIAL		SOLEX 32 EIES	M	I052	
FIAT	124 COUPE - SPYDER	73	WEBER 34 DFH	M	W039	
FIAT	124 SPORT 1.6	75	WEBER 2x40 IDF 14	M	W123	
FIAT	124 SPORT 1.6	75	SOLEX 2x40 PII 6	M	I070	
FIAT	124 ABARTH	79	WEBER 2x44 IDF 20	M	W514	
FIAT	124 COUPE USA		WEBER 26/34 DHSA	A	W050	
FIAT	125 - 125 SPECIAL	72	WEBER 34 DCHE 4.5	M	W040	
FIAT	125 - 125 SPECIAL	72	SOLEX 34 PAIA	M	I034	
FIAT	126-126 PERSONAL595-650cc	83	WEBER 28 IMB	M	W209	
FIAT	126 BIS	88	WEBER 30 DGF	M	W381	
FIAT	126 BIS FSM		30 S2H	M	W563	

Carburettor Service Kits Applications

MAKE	MODEL	YEAR	CARB MODEL	CHOKE	KIT NO.	INC. DIAPHRAGM
FIAT	PANDA 30	83	WEBER 30 DGF	M	W381	
FIAT	PANDA 30	83	SOLEX 30 DID	M	I080	
FIAT	PANDA 750 FIRE	85	WEBER 32 TLF	M	W521	
FIAT	PANDA 45 - 45 S 903cc	79	WEBER 32 ICEV 51	M	W374	
FIAT	PANDA 45 - 45 S 903cc	79	SOLEX 32 DISA 1-5-7	M	I081	
FIAT	PANDA YOUNG	87	WEBER 32 ICEV 61	M	W374	W374.1
FIAT	PANDA 1000 FIRE	85	WEBER 32 TLF	M	W521	
FIAT	PANDA 4x4	84	WEBER 32 DATR 10/100	A	W332	W332.1
FIAT	PANDA 4x4 FIRE	85	WEBER 32 TLF	M	W521	
FIAT	127 900cc	83	WEBER 30 IBA - 32 IBA	M	W382	
FIAT	127 900cc	83	SOLEX 30 DI 40	M	I077	
FIAT	127 1050cc	-80	WEBER 32 ICEV	A	W374	W374.2
FIAT	127 1050cc	80-	WEBER 32 ICEV	A	W374	W374.3
FIAT	127 1050cc	80-	SOLEX 32 TDI	A	I086	
FIAT	127 SPORT 1049cc - 1310cc	83	WEBER 34 DMTR	M	W179	
FIAT	147 1300cc BRASIL		SOLEX 32 DISA 40	M	I097	
FIAT	128 1100cc	78	WEBER 32 ICEV 10	M	W374	
FIAT	128 1100cc	78	SOLEX 32 DISA 20	M	I061	
FIAT	128 1300cc	78	WEBER 32 ICEV 18/200	M	W374	
FIAT	128 1300cc	78	SOLEX 32 DISA 25	M	I078	
FIAT	128 1301cc	82	WEBER 32 ICEV 25/250	M	W374	
FIAT	128 1301cc	82	SOLEX 32 DISA	M	I078	
FIAT	128 COUPE - RALLY 1301cc	77	WEBER 32 DMTR 20	M	W179	
FIAT	128 FAMILIARE 1300cc	-80	WEBER 32 ICEV	A	W374	
FIAT	128 FAMILIARE 1300cc	80-	WEBER 32 ICEV	A	W374	
FIAT	UNO 45 E.S.	84	WEBER 32 ICEE	M	W374	
FIAT	UNO 45 E.S.	84	SOLEX 32 DISA	M	I081	
FIAT	UNO 45	84	WEBER 32 ICEV	M	W374	
FIAT	UNO 45	84	SOLEX 32 DISA	M	I081	
FIAT	UNO 45 STING	87	WEBER 32 ICEV 61	M	W374.1	
FIAT	UNO 45 FIRE	85	WEBER 32 TLF	M	W521	
FIAT	UNO 55 - 55 S	84	WEBER 32 ICEV 51/251	M	W374	
FIAT	UNO SELECT 1300cc	84	WEBER 30/32 DMTR 105/150	A	W332	W332.1
FIAT	UNO 60 S - 60 SL 1100cc	85	WEBER 30/32 DMTE	M	W518	
FIAT	UNO 60 FIRE 1108cc	88	WEBER 32 TLF	M	W543	
FIAT	UNO 60 FIRE 1108cc	88	WEBER 30/32 DMTR 90	M	W518	
FIAT	UNO 70 - UNO SX	83	SOLEX 30/32 CIC	M	I095	
FIAT	UNO CS	87	WEBER 30/32 DMTE	M	W542	
FIAT	DUNA 60-70 - WEEKEND	87	WEBER 30/32 DMTE	M	W542	
FIAT	TIPO 1100 - 1100 DGT	88	WEBER 32 TLF	M	W543	
FIAT	TIPO 1400 - 1600 DGT	88	WEBER 32/34 TLDE	M	W544	
FIAT	TEMPRA 1.4 - 1.6	90	WEBER 32/34 TLDE	M	W544	
FIAT	RITMO 60 L 1050cc	79	WEBER 32 ICEV	M	W374	
FIAT	STRADA	79	SOLEX 32 DISA 2	M	I081	
FIAT	RITMO 60 1100cc	83	WEBER 32 ICEV 21	M	W374	
FIAT	STRADA	83	SOLEX 32 DISA 2	M	I081	
FIAT	RITMO 65 L - CL 1300cc	83	WEBER 32 ICEV 22	M	W374	
FIAT	STRADA	83	SOLEX 32 DISA 3	M	I081	
FIAT	RITMO 75 1500cc	78	WEBER 34 ICEV	M	W374	
FIAT	STRADA	78	SOLEX 34 DISA	M	I081	
FIAT	RITMO 75 S 1500cc	79	WEBER 34 DATR 8/200	M	W332	W332.1
FIAT	RITMO E.S.	83	WEBER 30 DMTE 250	M	W383	
FIAT	STRADA	83	SOLEX 30 CIC 1	M	I093	
FIAT	RITMO S 85	79	WEBER 34 DMTR 53/450	M	W240	
FIAT	STRADA	79	SOLEX 32/34 CIC 2	M	I093	
FIAT	NUOVA RITMO S 85	82	WEBER 32/34 DMTR	M	W516	
FIAT	NUOVA RITMO S 85	82	SOLEX 32/34 CIC	M	I095	
FIAT	RITMO SPORT 1600cc	83	WEBER 34 DAT 11/250	M	W499	
FIAT	RITMO 105 TC - 125 TC	83	WEBER 32/34 DMTR 82/250	M	W377	

Carburettor Service Kits Applications

MAKE	MODEL	YEAR	CARB MODEL	CHOKE	KIT NO.	INC. DIAPHRAGM
FIAT	RITMO 130 ABARTH 2000cc	83	SOLEX 2x40 ADDHE	M	I096	
FIAT	RITMO 130 ABARTH 2000cc	83	WEBER 2x40 DCOE	M	W004	
FIAT	RITMO 70 1300cc	83	WEBER 30/30 DMTR	M	W518	
FIAT	REGATA 70	83	SOLEX 30/32 CIC	M	I095	
FIAT	RITMO 75S GERMANY	85	WEBER 32/34 TLDE	A	W524	W524.1
FIAT	REGATA 75 S GERMANY		WEBER 32/34 TLDE	A	W524	W524.1
FIAT	RITMO 85 S	83	WEBER 32/34 DMTR	M	W519	
FIAT	REGATA 85 S		SOLEX 32/34 CIC	M	I095	
FIAT	RITMO 85 S - REGATA 85 S	86	WEBER 32/34 TLDE	M	W524	
FIAT	REGATA E.S. 1300cc	83	WEBER 30/32 DMTE	M	W518	
FIAT	REGATA E.S. 1300cc	83	SOLEX 30/32 CIC	M	I095	
FIAT	REGATA 100 S 1600cc	83	WEBER 32/34 DMTR 92/250	M	W516	
FIAT	REGATA 100 S 1600 cc	83	WEBER 34 DMTR 87/250	M	W517	
FIAT	131 CL 1300cc		WEBER 32 ADF 3/200	A	W268	W268.1
FIAT	131 CL 1300cc		SOLEX 32 TEIE	A	I075	I075.1
FIAT	131 1300cc - 1600cc		WEBER 32 ADF 51	A	W268	W268.2
FIAT	131 1300cc - 1600cc		SOLEX 32 TEIE 42	A	I083	I083.1
FIAT	131 TC 1300cc - 1600cc		WEBER 32 ADF 52/250	A	W497	W497.1
FIAT	131 TC 1300cc - 1600cc		SOLEX 32 TEIE 9.10	A	I084	I084.1
FIAT	131 TC 2000cc	78	WEBER 34 ADF 54/250	A	W497	W497.1
FIAT	132 GLS 1600cc - 1800cc		WEBER 34 DMS	M	W136	W136.1
FIAT	132 GLS 1600cc - 1800cc		SOLEX 34 EIES	M	I066	
FIAT	132 1600cc - 1800cc - 2000cc	75	WEBER 32 ADF - 34 ADF	A	W268	W268.2
FIAT	132 1600cc - 1800cc - 2000cc	75	SOLEX 32 TEIE 44	A	I085	I085.1
FIAT	132 ABARTH	75	WEBER 2x48 IDF 2/100	M	W172	
FIAT	130 BERLINA	70	WEBER 45 DFC 12/13	M	W135	
FIAT	ARGENTA 1600cc		WEBER 32 ADF 56/250	A	W268	W268.2
FIAT	ARGENTA 1600cc		SOLEX 32 TEIE 5	A	I084	I084.1
FIAT	ARGENTA 2000cc	78	WEBER 34 ADF 54/250	A	W497	W497.1
FIAT	ARGENTA VX	78	WEBER 34 ADE	A	W497	W497.2
FIAT	CROMA 1600cc	85	WEBER 32/34 DAT 52/250	A	W525	W525.1
FIAT	CROMA CHT 2000cc	85	WEBER 34 DAT 54/250	A	W526	W526.1
FIAT	XI/9 EUROPA	76	WEBER 34 DATR 7/250	A	W325	W325.1
FIAT	XI/9 USA - AUSTRALIA		WEBER 32 DATRA	A	W203	
FIAT	XI/9 USA		WEBER 28/30 DHTA 7	A	W316	W316.1
FIAT	BRAVA USA		WEBER 28/32 ADHD	A	W356	W356.1
FIAT	STRADA USA		WEBER 28/30 DHTA	A	W316	W316.1
FIAT COMM						
FIAT COMM	900 T - 900 E		WEBER 30 ICF 21/250	M	W278	
FIAT COMM	FIORINO 1050cc	-80	WEBER 32 ICEV	A	W374	W374.2
FIAT COMM	FIORINO 1050cc	80-	WEBER 32 ICEV	A	W374	W374.3
FIAT COMM	DUCATO 1796cc - 1971cc		SOLEX 34 PBISA	M	F015	
FIAT COMM	238 E		WEBER 32 OF	M	W052	
FIAT COMM	242		SOLEX 32 EIES 7	M	I052	
FIAT COMM	IVECO DAILY 35/9		WEBER 32 ADF 20/25	A	W268	W268.1
FIAT COMM	CAMPAGNOLA 1900cc		SOLEX 32 CBI	M	I051	
FIAT COMM	NUOVA CAMPA		SOLEX 32 PHHE	M	I098	
FORD						
FORD	CAPRI MKI 1300 UK	73	FOMOCO 1250 AUTOLITE	M	G031	
FORD	CAPRI GT MKI 1300 UK	71 / 76	WEBER 32 DGV	M	W140	
FORD	CAPRI MKI 1600 OHV-OHC	73	WEBER 32/36 DGAV	A	W140	W140.1
FORD	CAPRI MKI 1600 OHV-OHC	73	FOMOCO 1250 AUTOLITE	A	G031	
FORD	CAPRI MKII 1.3 - 1.6 UK	77	FOMOCO 1250 AUTOLITE	A	G031	
FORD	CAPRI MKII UK	-77	WEBER 32/36 DGAV	A	W140	W140.1
FORD	1600 GT-1600S -2000GT OHC	77-	WEBER 32/36 DGAV	A	W141	W141.1
FORD	CAPRI MKIII 1.3 - 1.6 UK	79	FOMOCO 1250 AUTOLITE	M	G031	
FORD	CAPRI MKIII 1.3 - 1.6 UK	81	MOTORCRAFT V.V.	A	G033	
FORD	CAPRI 1593cc GT/S	72-81	WEBER CONV. 32/36 DGV	M	W141	
FORD	CAPRI 1993cc	70-87	WEBER CONV. 32/36 DGV	M	W141	
FORD	CORTINA 1593cc GT/S	72-83	WEBER CONV. 32/36 DGV	M	W141	

Carburettor Service Kits Applications

MAKE	MODEL	YEAR	CARB MODEL	CHOKE	KIT NO.	INC. DIAPHRAGM
FORD	CORTINA 1993	70-82	WEBER CONV. 32/36 DGV	M	W141	
FORD	CAPRI MKIII 2.0 UK	77-	WEBER 32/36 DGAV	A	W140	
FORD	CAPRI 3000 V6	77-	WEBER 32/36 DGAV	A	W141	
FORD	ESCORT 1100 - 1300 MKII	75	FOMOCO 1250 AUTOLITE	M	G031	
FORD	ESCORT 1300 GT - SPORT	75	WEBER 32 DGV	M	W140	
FORD	ESCORT 1600 GT	79	WEBER 32 DGAV	A	W553	W553.1
FORD	ESCORT HCS 1300	87on	WEBER TLDM	M	W548	
FORD	ESCORT MK III	81-86	MOTORCRAFT	A	G033	
FORD	ESCORT 1400 CLX	87	WEBER 28/32 TLDM	M	W548	
FORD	ESCORT 1117cc	81-88	WEBER CONV. 32 IBF	M	W287	
FORD	ESCORT 1117cc	81-85	WEBER CONV. 32 IBF	M	W287	
FORD	ESCORT/ORION FWD 1295cc	80-86	WEBER CONV. 32 IBF	M	W287	
FORD	ESCORT/ORION FWD 1297cc	86-89	WEBER CONV. 32 IBF	M	W287	
FORD	ESCORT/ORION FWD 1392cc	86-90	WEBER CONV. 32/34 DMTL	M	W561	
FORD	ESCORT/ORION FWD 1392cc	85-90	WEBER DFTM	M	W551	W551.1
FORD	ESCORT/ORION FWD 1597cc	80-85	WEBER CONV. 32 IBF	M	W287	
FORD	ESCORT/ORION FWD 1597cc	82-85	WEBER CONV. 32 IBF	M	W287	
FORD	ESCORT RWD MEXICO	70-75	WEBER CONV. 32/36 DGV	M	W141	
FORD	ESCORT XR3		WEBER CONV. 34 DATR	A	W325	
FORD	ESCORT XR3	81	WEBER 32/34 DFT	A	W245	
FORD	ESCORT XR3 1597cc		WEBER CONV. 34 DMTR		W517	
FORD	ESCORT 1600 GHIA	86	WEBER 30/34 DFTM	A	W551	
FORD	ESCORT 1600 GHIA	82	WEBER 28/32 TLDM	A	W547	
FORD	ORION 1.3	84	MOTORCRAFT V.V.	M	G033	
FORD	ORION 1.4	86	WEBER 28/30 DFTM	M	W551	W551.1
FORD	ORION 1.4	87	WEBER 28/32 TLDM	M	W548	
FORD	ORION 1.6	83	MOTORCRAFT V.V.	A	G033	
FORD	ORION 1.6	87	WEBER 28/32 TLDM	A	W547	W547.1
FORD	FIESTA 950 - 1100	81-86	FOMOCO 1250 AUTOLITE	M	G031	
FORD	FIESTA 950 - 1100	81-86	WEBER 32 ICH	M	W288	
FORD	FIESTA 1.0	86	WEBER 32 TLM	M	W546	
FORD	FIESTA 1100 - 1300	83	MOTORCRAFT V.V.	A	G033	
FORD	FIESTA 1100 S - 1300 S	83	WEBER 32 DFT	A	W245	W245.1
FORD	FIESTA 1117cc	83-87	WEBER CONV. 32 IBF	M	W287	
FORD	FIESTA 1118 cc	87	WEBER 26/28 TLDM	M	W548	
FORD	FIESTA 1295cc		WEBER CONV. 32 IBF	M	W287	
FORD	FIESTA 1.4 CLX	87	WEBER 28/30 DFTM	M	W551	W551.1
FORD	FIESTA 1600	79	WEBER 32 DFTA	A	W245	W245.2
FORD	FIESTA XR2 1598cc		WEBER CONV. 34 DATR	A	W325	
FORD	FIESTA XR2 1598cc		WEBER CONV. 34 DMTR	M	W517	
FORD	FIESTA XR2 1597cc		WEBER CONV. 34 DMTR	M	W517	
FORD	XR2 1600	82	WEBER 32/34 DFTA	A	W245	W245.2
FORD	XR2 1600	86	WEBER 28/32 TLDM	A	W547	W547.1
FORD	XR3 1600	83	WEBER 32/34 DFT	A	W245	W245.2
FORD	TAUNUS/CORTINA 1300-1600	81	MOTORCRAFT V.V.	M	G033	
FORD	TAUNUS 1600 GT	79	WEBER 32 DGAV	A	W553	W553.1
FORD	TAUNUS 1600 GT	-77	WEBER 32 DGAV	A	W140	W140.1
FORD	CORTINA 1600 / 2000	77-	WEBER 32/36 DGAV	A	W141	W141.1
FORD	TAUNUS 2.0-2.3 HC GRANADA 2.0	81	PIERBURG 32/35 EEIT	A	G034	
FORD	TAUNUS 2.0-2.3 HC GRANADA 2.0	-77	WEBER 32/36 DGAV	A	W140	W140.1
FORD	TAUNUS 2.0-2.3HC GRANADA 2.0	77-	WEBER 32/36 DGAV	A	W553	W553.1
FORD	GRANADA	83-	PIERBURG 35 EEIT	A	G034	
FORD	GRANADA 2.8 HC	82	PIERBURG 38 EEIT	A	G036	G036.1
FORD	GRANADA 2.8 HC	82	WEBER 38 DGAS	A	W553	W553.1
FORD	SIERRA 1.6	82	MOTORCRAFT V.V.	A	G033	
FORD	SIERRA 1.6	83	WEBER 32 DGAV	A	W553	W553.1
FORD	SIERRA 1.6	86	WEBER 28/30 DFTH	A	W550	W550.1
FORD	SIERRA 1796cc	84-88	WEBER CONV. 32/34 DMTL	M	W561	
FORD	SIERRA / SAPPHIRE 1796cc	84-88	WEBER CONV. 32/34 DMTL	M	W561	
FORD	SIERRA / SAPPHIRE 1796cc	88-92	WEBER CONV. 32/34 DMTL	M	W561	
FORD	SIERRA / SAPPHIRE 1993cc	85-89	WEBER CONV. 32/34 DMTL	M	W561	

Carburettor Service Kits Applications

MAKE	MODEL	YEAR	CARB MODEL	CHOKE	KIT NO.	INC. DIAPHRAGM
FORD	SIERRA / SAPPHIRE	82-84	WEBER CONV. 32/36 DGV	M	W141	
FORD	SIERRA 1.8 OHC	84	PIERBURG 28/32 2E3	A	G044	
FORD	SIERRA 2.0	84	WEBER 32/36 DGAV	A	W553	W553.1
FORD	SIERRA 2.0	86	WEBER 30/34 DFTH	A	W549	W549.1
FORD	SIERRA 2.0 DOHC		WEBER TLDM	M	W548	
FORD	SIERRA 2.3 HC	82	PIERBURG 38 EEIT	A	G036	G036.1
FORD	SIERRA XR6 V6 3.0	84	WEBER 38 DGAS	A	W562	W562.1
FORD	GRANADA / SCORPIO 1796cc	85-88	WEBER CONV. 32/34 DMTL	M	W561	
FORD	GRANADA / SCORPIO 1993cc	85-89	WEBER CONV. 32/34 DMTL	M	W561	
FORD	GRANADA / SCORPIO 1993cc	72-85	WEBER CONV. 32/36 DGV	M	W141	
FORD	SCORPIO 1.8 OHC	84	PIERBURG 28/32 2E3	A	G044	
FORD	SCORPIO 2.0	86	WEBER 30/34 DFTH	A	W549	W549.1
FORD	FALCON 3.3 - 4.1	85	WEBER 34 ADM	A	W552	W552.1
FORD	CAPRI 3000 V6		WEBER 40 DFAV	A	W146	
FORD COMM						
FORD COMM	TRANSIT 1.6-2.0	78	FOMOCO 1250 AUTOLITE	A	G031	
FORD COMM	P100 - LI PICK-UP 1.6	83	MOTORCRAFT V.V.	A	G033	
FORD COMM	CORTINA PICK - UP 3.0 COURIER V685		WEBER 38 DGAS	A	W562	W562.1
FSO POLSKI FIAT						
FSO POLSKI FIAT	1299cc	75	WEBER CONV. 34 DCHD	M	W074	
HILLMAN						
HILLMAN	AVENGER1250-1300-1500-1600	76	STROMBERG 150 CD	M	G037	
HILLMAN	AVENGER 1300 GT - 1600 GT	76	STROMBERG 175 CD	M	G038	
HILLMAN	HUNTER 1500-1725-1725 GT	76	STROMBERG 150 CDS	M	G037	
HONDA						
HONDA	CIVIC 1200 - 1500	79	HITACHI DCG 306	M	J312	
HONDA	CIVIC 1300 - 1300 S - 1500	81	KEIHIN DA 76 B	M	J750	
HONDA	ACCORD 1600	81	KEIHIN DA 76 B	M	J750	
HONDA	ACCORD - QUINTET	83	KEIHIN DA 68	A	J752	
HONDA	PRELUDE COUPE		KEIHIN	M	J754	
HYUNDAI						
HYUNDAI	PONY 1200 - 1400	82	MIKUNI-SOLEX 28/32 DIDTA	A	J615	
HYUNDAI	STELLAR 1400 - 1600	83	MIKUNI-SOLEX 28/32 DIDTA	A	J615	
HYUNDAI	PONY 1.3 GLS	84	NIKKI	M	J475	
HYUNDAI	PONY 1298cc	85-90	WEBER CONV. 32/34 DMTL	M	W561	
HYUNDAI	PONY 1498cc	85-90	WEBER CONV. 32/34 DMTL	M	W561	
JAGUAR						
JAGUAR	XJ6 3.4 L	83	S.U. HIF 7	M	S008	
JAGUAR	XJ6 4.2 L	78	S.U. HIF 7	M	S008	
JAGUAR	XJ6 4.2 L	75	STROMBERG 175 CDSE	M	G038	
LADA						
LADA	1200 - 1300 - 1500 - 1600	82	32 DCR	M	W515	
LADA	SAMARA 1300 cc	85	SOLEX 30/32 Z	M	F058	F058.1
LADA	NIVA 4x4 1570cc	78-95	WEBER CONV. 32 DGR	M	W140	
LADA	NIVA 1600 4WD 21 01	78	32 DCR	M	W515	
LADA	NIVA 1600 4WD	85	SOLEX 30/32 Z	M	F058	F058.1
LADA	NIVA 1600 4WD 2105	83	28/32 DCR	M	W560	
LADA	RIVA 1198cc	74-90	WEBER CONV. 32 DGR	M	W140	
LADA	RIVA 1294cc	77-93	WEBER CONV. 32 DGR	M	W140	
LADA	RIVA 1452cc	75-93	WEBER CONV. 32 DGR	M	W140	
LADA	RIVA 1570cc	78-93	WEBER CONV. 32 DGR	M	W140	
LANCIA						
LANCIA	FLAVIA 2000cc	69	SOLEX 34 EIES	M	I057	
LANCIA	2000 cc	71	SOLEX 36 EIES	M	I067	
LANCIA	FULVIA 2C 1200	68	SOLEX 2x32 PHH	M	I046	
LANCIA	FULVIA 1200	72	SOLEX 2x35 PHH	M	I056	
LANCIA	FULVIA 1300 S	76	SOLEX 2x35 PHHE	M	I074	
LANCIA	FULVIA 1600 S	69	SOLEX 2x42 DDHF	M	I064	
LANCIA	BETA 1.3	75	SOLEX 32 CIC 3	M	I071	
LANCIA	BETA 1.3	75	WEBER 32 DMTR 31/200	M	W267	

Carburettor Service Kits Applications

MAKE	MODEL	YEAR	CARB MODEL	CHOKE	KIT NO.	INC. DIAPHRAGM
LANCIA	BETA 1.3	76	WEBER 32 DAT	A	W267	W267.1
LANCIA	BETA 1.4	73	SOLEX 32 CIC 1	M	I071	
LANCIA	BETA 1.4	73	WEBER 32 DMTR 24/200	M	W267	
LANCIA	BETA 1.6 - 1.8	73	SOLEX 34 CIC 1	M	I072	
LANCIA	BETA 1.6 - 1.8	73	WEBER 34 DMTR 21/200	M	W267	
LANCIA	BETA 1.6	77	SOLEX 34 TCIC	A	I072	
LANCIA	BETA 1.6	77	WEBER 34 DAT 8/250	A	W269	W269.1
LANCIA	BETA 1.6	76	SOLEX 34 CIC 1	A	I072	
LANCIA	BETA 1.6	76	WEBER 34 DATR 1/250	A	W269	W269.1
LANCIA	BETA 2000 - 2000 HPE	82	WEBER 34 DAT 2/252	A	W269	W269.1
LANCIA	BETA MONTECARLO 2000	76	WEBER 34 DATR 4/250	A	W269	W269.1
LANCIA	DELTA 1300	81	WEBER 32 DAT 7/252	A	W269	W269.1
LANCIA	DELTA 1300 S	82	WEBER 32 DAT 12/250	A	W389	W389.2
LANCIA	DELTA 1300	86	WEBER 32/34 TLDA	A	W524	W524.1
LANCIA	DELTA 1500	81	WEBER 34 DAT 8/252	A	W389	W389.1
LANCIA	DELTA GT 1600	82	WEBER 34 DAT 13/250	A	W520	W520.1
LANCIA	DELTA HF TURBO	83	WEBER 32 DAT 18/250	A	W535	W535.1
LANCIA	PRISMA 1300	81	WEBER 32 DAT 7/252	A	W269	W269.1
LANCIA	PRISMA 1300 S	82	WEBER 32 DAT 12/250	A	W389	W389.2
LANCIA	PRISMA 1300	86	WEBER 32/34 TLDA	A	W524	W524.1
LANCIA	PRISMA 1500	81	WEBER 34 DAT 8/252	A	W389	W389.1
LANCIA	PRISMA 1600	83	WEBER 34 DAT 8/252	A	W389	W389.1
LANCIA	PRISMA 1600 GT	82	WEBER 34 DAT 13/250	A	W520	W520.1
LANCIA	TREVI VOLUMEX	83	WEBER 36 DCA 5/251	A	W388	
LANCIA	GAMMA 2000	80	WEBER 36 ADLD 1/151	A	W180	
LANCIA	GAMMA 2500	80	WEBER 38 ADL 300	A	W501	
LAND ROVER						
LAND ROVER	LAND ROVER 88 - 109	67	ZENITH 36 IV	M	G039	
LAND ROVER	LAND ROVER 2.6 - 3.5	80	STROMBERG 2xl75 CDSE	A	G038	
LAND ROVER	LAND ROVER 2.3	83	WEBER 32/34 DMTL	M	W561	
LAND ROVER	RANGE ROVER 3.5 V8	85	STROMBERG 2xl75 CDSE	A	G038	
LAND ROVER	LAND ROVER 3.5	83	STROMBERG 2xl75 CDS	A	G038	
LAND ROVER	2286cc SERIES IIA & III		WEBER CONV. 34 ICH	M	W292	
LAND ROVER	2286cc SERIES II & III + SOL		WEBER CONV. 34 ICH	M	W292	
LAND ROVER	2286cc SERIES II & III LHD		WEBER CONV. 34 ICH	M	W292	
LEYLAND						
LEYLAND	MINI 1001	74	S.U. HS4	M	S001	
LEYLAND	REGENT1300	74	S.U. HS4	M	S001	
LEYLAND	MINI COOPER	74	S.U. 2xHS2	M	S002	
LEYLAND	MINI CLUBMAN 1300	74	S.U. 2xHS3	M	S002	
LEYLAND	REGENT 1300	74	S.U. 2xHS4	M	S002	
LEYLAND	MINI 90	74	S.U. HS4	M	S001	
LEYLAND	MINI 90	75	S.U. HS4 CAPSTAT	M	S003	
LEYLAND	MINI 120	75	S.U. HS6 CAPSTAT	M	S004	
LEYLAND	MINI DE TOMASO	75	S.U. HS6 CAPSTAT	M	S004	
LEYLAND	METRO	80	S.U. HIF 44	M	S005	
LEYLAND	METRO 1300	80	S.U. HIF 44	M	S005	
LEYLAND	MINI 3 cyl.	82	AISAN	M	J207	
LOTUS						
LOTUS	ELAN GT S4 - SE 1558cc	78	WEBER 2x40 DCOE	M	W004	
LOTUS	ELITE - ESPRIT 2000	78	DELLORTO 2x45 DHLA	M	D010	
LOTUS	ESPRIT TURBO EUROPA2000	78	DELLORTO 2x40 DHLA	M	D010	
LOTUS	2200 - TALBOT 2.2	83	DELLORTO 2x45 DHLA	M	D010	
MASERATI						
MASERATI	BITURBO 420 2000cc	83	WEBER 34 DAT 23/150	A	W536	W536.1
MASERATI	BITURBO S V6 2000cc	83	WEBER 36 DCNVH 26	M	W522	
MASERATI	BITURBO 425 V6 2500cc	84	WEBER 36 DCNVH 27	M	W522	
MASERATI	BITURBO USA V6 2500cc	83	WEBER 36 DCNVH 24	M	W522	
MAZDA						
MAZDA	1200 -1300	74	HITACHI	M	J313	

Carburettor Service Kits Applications

MAKE	MODEL	YEAR	CARB MODEL	CHOKE	KIT NO.	INC. DIAPHRAGM
MAZDA	1000 - 1300	78	HITACHI	M	J312	
MAZDA	323 1100-1300-1500-323 GT	81	HITACHI DCT 306	M	J301	
MAZDA	323 1500cc	80	HITACHI DCG 306	M	J312	
MAZDA	808 1300cc	82	HITACHI DCG 306	M	J312	
MAZDA	323 1000cc - 1300cc - 1400cc	80	HITACHI DCG 306	M	J312	
MAZDA	323 1600cc	81	MIKUNI 28/32 DIDTA	A	J602	
MAZDA	626 1600cc - 2000cc	82	NIKKI	A	J470	
MAZDA	626 1800 - 2000	83	NIKKI	A	J475	
MAZDA COMM						
MAZDA COMM	1300 VAN	76	HITACHI	M	J313	
MERCEDES - BENZ						
MERCEDES - BENZ	190 2000cc	80	STROMBERG 175 CDT	A	G014	
MERCEDES - BENZ	190 2000cc	86	PIERBURG 29/34 2EE	A	G053	
MERCEDES - BENZ	200 2000cc	86	PIEREBURG 29/34 2EE	A	G053	
MERCEDES - BENZ	200 - 220 - 230	80	STROMBERG 175 CDT	A	G014	
MERCEDES - BENZ	230 S - 250 S - 280 S	76	ZENITH 35/40 INAT	A	G015	
MERCEDES - BENZ	250 - 250 T - 280	79	PIERBURG 32/54 4AI	A	G016	
MERCEDES COMM						
MERCEDES COMM	L319B - L408 1.9 - 2.0 - 2.2	76	PIERBURG 34 PICB	M	G054	
MERCEDES COMM	L208 - L308 - L409 - L601 2.3	80	PIERBURG 40 PDSI	M	G008	
MERCEDES COMM	L410 - L601 2.3	85	PIERBURG 36 1B3	A	G005	
MERCEDES COMM	L410 - L601 2.3	89	PIERBURG 29/34 2EE	A	G053	
MG						
MG	MAESTRO	83	WEBER 40 DCNF	A	W556	
MG	METRO 1300	82	S.U. HIF 44	M	S010	
MG	MIDGET 1500	78	S.U. HS4	M	S001	
MG	B - GT	72	S.U. HS4	M	S001	
MG	B - GT	82	S.U. HIF 4	M	S009	
MG	B - GTV8	76	S.U. HIF 6	M	S007	
MG	MIDGET MKII - III 1275 cc	74	S.U. HS4	M	S001	
MITSUBISHI						
MITSUBISHI	CELESTE 1600cc	81	MIKUNI 28/32 DIDTA	A	J602	
MITSUBISHI	CELESTE 2000cc	81	MIKUNI 30/32 DIDTA	A	J600	
MITSUBISHI	COLT 1200	82	MIKUNI 26/30 DIDTA	A	J612	
MITSUBISHI	COLT 1250	83	AISAN 6EE	A	J224	
MITSUBISHI	COLT 1400	82	MIKUNI 28/32 DIDTA	A	J602	
MITSUBISHI	TREDIA 1400 - 1600	82	AISAN 6EE	A	J224	
MITSUBISHI	LANCER 1200 - 1250	81	AISAN 6EE	A	J224	
MITSUBISHI	LANCER 1400	79	AISAN 6EE	A	J224	
MITSUBISHI	LANCER 1400	79	MIKUNI 28/32 DIDTA	A	J602	
MITSUBISHI	LANCER 1400	82	MIKUNI 26/30 DIDTA	A	J612	
MITSUBISHI	LANCER 1600	79	AISAN 6EE	A	J224	
MITSUBISHI	LANCER 1600	79	MIKUNI 28/32 DIDTA	A	J602	
MITSUBISHI	LANCER 1600	82	MIKUNI 30/32 DIDTA	A	J600	
MITSUBISHI	GALANT 1600	80	AISAN 6EE	A	J224	
MITSUBISHI	GALANT 2000	79	MIKUNI 28/32 DIDTA	A	J602	
MITSUBISHI	CORDIA 1600	83	AISAN 6EE	A	J224	
MITSUBISHI	MIRAGE 1400	83	AISAN 6EE	A	J224	
MITSUBISHI	SAPPORO GRS 2000	78	MIKUNI 30/32 DIDTA	A	J600	
MITSUBISHI	4WD 2000	81	MIKUNI 30/32 DIDTA	A	J600	
MITSUBISHI COMM						
MITSUBISHI COMM	L200 PICK-UP - L300 VAN	79	AISAN 6EE	A	J224	
MITSUBISHI COMM	L200 PICK-UP - L300 VAN	79	MIKUNI DIDTA	A	J600	
MORGAN						
MORGAN	4/4 1600 cc MOT. FIAT	81	WEBER 32 ADF	A	W268	W268.1
MORGAN	4/4 1600 cc MOT. FIAT	81	SOLEX 32 TEIE	A	I083	I083.1
MORGAN	4/4 1600 cc MOT. FORD	80	WEBER 32/36 DGAV	A	W140	W140.1
MORGAN	4/4 1600 cc MOT. FORD	81	WEBER 32/34 DFT	A	W245	W245.2
NISSAN - DATSUN						
NISSAN - DATSUN	100 A CHERRY 988cc	82	HITACHI DCG 286	M	J312	

Carburettor Service Kits Applications

MAKE	MODEL	YEAR	CARB MODEL	CHOKE	KIT NO.	INC. DIAPHRAGM
NISSAN - DATSUN	120 A CHERRY 1171cc	82	HITACHI DCG 306	M	J312	
NISSAN - DATSUN	CHERRY EUROPA 1.2	83	WEBER 32 DIR	M	W250	
NISSAN - DATSUN	CHERRY EUROPA 1.5	83	WEBER 2x40 IDF	M	WI23	
NISSAN - DATSUN	CHERRY 1.3 1300 cc	82	HITACHI DCG 306	M	J312	
NISSAN - DATSUN	120 Y A12 - 140 Y	80	HITACHI DCG 306	M	J312	
NISSAN - DATSUN	140 Y SUNNY 1397cc	80	HITACHI DCG 306	M	J312	
NISSAN - DATSUN	140 J VIOLET 1397cc	81	HITACHI DCG 306	M	J312	
NISSAN - DATSUN	SUNNY 1.3 B11	82	HITACHI DCG 306	M	J312	
NISSAN - DATSUN	MICRA 1.0	83	HITACHI DCG 306	M	J312	
NISSAN - DATSUN	BLUEBIRD 1.6 - 1.8	82	NIKKI DCH 340	A	J466	
NISSAN - DATSUN	STANZA 1600 - 1800	82	NIKKI DCH 340	A	J46	
NISSAN - DATSUN	LAUREL 2.0 - 2.4	83	NIKKI DAH 342	A	J466	
NISSAN - DATSUN	260 C - 280 C	83	NIKKI DAH 342	A	J466	
NISSAN - DATSUN	SUNNY 1392cc	89-91	WEBER CONV. 32/34 DMTL	M	W561	
NISSAN - DATSUN	SUNNY 1392cc	92-93	WEBER CONV. 32/34 DMTL	M	W561	
NISSAN - DATSUN	SUNNY 1597cc	89-91	WEBER CONV. 32/34 DMTL	M	W561	
NISSAN - DATSUN	SUNNY 1597cc	92-93	WEBER CONV. 32/34 DMTL	M	W561	
NISSAN - DATSUN	STANZA 1598cc	82-86	WEBER CONV. 32/34 DMTL	M	W561	
NISSAN - DATSUN	STANZA 1809cc	82-86	WEBER CONV. 32/34 DMTL	M	W561	
NISSAN - DATSUN	PRARIE 1809cc	84-89	WEBER CONV. 32/34 DMTL	M	W561	
NISSAN - DATSUN	PRARIE 1973cc	89-92	WEBER CONV. 32/34 DMTL	M	W561	
NISSAN - DATSUN	PRARIE 1973cc	89-92	WEBER CONV. 32/34 DMTL	M	W561	
NISSAN - DATSUN	BLUEBIRD/VIOLET RWD 1595cc	72-82	WEBER CONV. 32/34 DMTL	M	W561	
NISSAN - DATSUN	BLUEBIRD/VIOLET RWD 1770cc	72-84	WEBER CONV. 32/34 DMTL	M	W561	
NISSAN - DATSUN	BLUEBIRD FWD 1598cc	86-90	WEBER CONV. 32/34 DMTL	M	W561	
NISSAN - DATSUN	BLUEBIRD FWD 1598cc	86-90	WEBER CONV. 32/34 DMTL	M	W561	
NISSAN - DATSUN	BLUEBIRD FWD 1800cc	84-90	WEBER CONV. 32/34 DMTL	M	W561	
NISSAN - DATSUN	BLUEBIRD FWD 1800cc	84-90	WEBER CONV. 32/34 DMTL	M	W561	
NISSAN - DATSUN	BLUEBIRD FWD 1973cc	84-90	WEBER CONV. 32/34 DMTL	M	W561	
NISSAN - DATSUN	BLUEBIRD FWD 1973cc	84-90	WEBER CONV. 32/34 DMTL	M	W561	
NISSAN - DATSUN	100 NX 1597cc	92-93	WEBER CONV. 32/34 DMTL	M	W561	
NISSAN COMM						
NISSAN COMM	1500 - 1800 PICK-UP	83	NIKKI DCH 340	A	J466	
NISSAN COMM	F20 - F22 - E20 - E23	82	NIKKI DCH 340	A	J466	
NISSAN COMM	PATROL	82	NIKKI DAH 342	A	J466	
OPEL						
OPEL	CORSA 1.0 S - 1.2 TS	83	WEBER 32 TL/250	M	W392	
OPEL	CORSA 1.0 S - 1.2 TS	83	PIERBURG 32 IBI	M	G005	
OPEL	CORSA 1.3 SR	83	PIERBURG 36 1BI	M	G005	
OPEL	CORSA 1.3 NVH - 1.4 NVH	88	PIERBURG 28/30 2E3	A	G044	
OPEL	KADETT 1.0 - 1.2	79	PIERBURG 30 PDSI	M	G017	
OPEL	KADETT 1.2 N - 1.3 N	79	PIERBURG 35 PDSIT	M	G018	
OPEL	ASCONA - MANTA - OLYMPIA	79	PIERBURG 35 PDSIT	M	G018	
OPEL	KADETT 1.2 GL	83	WEBER 32 TL 1/250	M	W392	
OPEL	KADETT 1.2 GL	83	PIERBURG 36 IBI	M	G005	
OPEL	KADETT 1.3 SR - 1.6 SR	81	VARAJET II	A	G035	
OPEL	ASCONA - MANTA	81	VARAJET II	A	G035	
OPEL	KADETT D 1.3 S - 1.4 - 1.5	84	PIERBURG 28/30 2E3	A	G044	
OPEL	ASCONA - MANTA B/C	84	PIERBURG 28/30 2E3	A	G044	
OPEL	KADETT 1.6 S - 1.9 S	80	PIERBURG 32 DIDTA	A	G019	
OPEL	ASCONA - MANTA	80	PIERBURG 32 DIDTA	A	G019	
OPEL	REKORD D 17 N - 17 L	77	PIERBURG 35 PDSI	M	G018	
OPEL	REKORD 1.9-MANTA 1.9 SR	78	ZENITH 35/40 INAT	A	G020	
OPEL	REKORD E 1.8 N	82	PIERBURG 36 1B3	A	G005	
OPEL	REKORD E 1.8 S - 2.0 S	82	VARAJET II	A	G035	
OPEL	ADMIRAL -COMMODORE 2.8	78	ZENITH 35/40 INAT	A	G020	
OPEL	MONZA - SENATOR 2.8 - 3.0	83	PIERBURG 32/44 4AI	A	G012	
OPEL	OMEGA 1.8	86	PIERBURG 28/30 2E3	A	G044	
OPEL	VECTRA 1.4 - 1.6	88	PIERBURG 28/30 2E3	A	G044	

MAKE	MODEL	YEAR	CARB MODEL	CHOKE	KIT NO.	INC. DIAPHRAGM
PEUGEOT						
PEUGEOT	104 950 cc XV3	-73	SOLEX 32 HNSA	M	F010	
PEUGEOT	104 950 cc XV3	73-	SOLEX 32 HSA	M	F011	
PEUGEOT	104 L - GL - SL - ZA	-83	SOLEX 32 PBISA 7-11	M	F035	
PEUGEOT	104 L - GL - SL - ZA	-83	WEBER 32 IBP 0/101	M	W341	
PEUGEOT	104 Z - GLS	-83	SOLEX 32 PBISA 12	M	F035.1	
PEUGEOT	104 Z - ZR - GR	83-	SOLEX 32 PBISA 12	M	F057	
PEUGEOT	104 S -ZS XW3S	-79	SOLEX 32 TMMIA	A	F013	
PEUGEOT	XY6B	79-	SOLEX 32/35 TACIC	A	F014	F014.1
PEUGEOT	104 ZS 80 HP	83	SOLEX 2x35 BISA 8	M	F051	
PEUGEOT	104 ZS 80 HP	83	WEBER 2x35 IBS	M	W533	
PEUGEOT	204	68	SOLEX 32 PBISA 3	M	F012	
PEUGEOT	204 BERLINA - BREAK	79	SOLEX 34 PBISA 5	M	F015	
PEUGEOT	205 - 205 GL	83	SOLEX 32 PBISA 12	M	F045	
PEUGEOT	205 - 205 GL	83	WEBER 32 IBSH 15	M	W532	
PEUGEOT	205 GR - SR - XR - XE	84	SOLEX 34 PBISA 12	M	F047	
PEUGEOT	205 GT - CT - XT - XS	83	SOLEX 2x35 BISA 8	M	F051	
PEUGEOT	205 GT - CT - XT - XS	83	WEBER 2x35 IBS	M	W533	
PEUGEOT	205 GT TU3S	87	SOLEX 32/34 Z2	M	F059	
PEUGEOT	205 RALLY	87	WEBER 2x40 DCOM	M	W545	
PEUGEOT	205 SPAGNA 1442cc	85	WEBER 36 DCNVH 20	M	W222	
PEUGEOT	205 AUTOMATICA 1600cc	85	WEBER 36 TLC 1 /1 00	A	W534	
PEUGEOT	304 1300cc		SOLEX 34 PBISA 3-4-5	M	F015	
PEUGEOT	304 S XL3S	-75	SOLEX 35 EEISA	A	F020	F020.1
PEUGEOT	304 XL5S	75-	SOLEX 32/35 TCICA	A	F017	F017.1
PEUGEOT	305GL-GR 1300cc	80	SOLEX 34 PBISA 5	M	F015	
PEUGEOT	305GL-GR 1300cc	80	WEBER 34 IPB 1/100	M	W523	
PEUGEOT	305 1360cc	87	WEBER 34 TLP	M	W534	
PEUGEOT	305 GR - SR 1500cc	82	SOLEX 35 PBISA 9-14	M	F015	
PEUGEOT	305 S 1500cc	82	SOLEX 32/35 TACIC	A	F014	F014.1
PEUGEOT	305 GT 1360cc	84	SOLEX 32/34 Z1	A	F046	
PEUGEOT	305 GT 1360cc	84	WEBER 32/34 DRTC	A	W379	W379.1
PEUGEOT	305 GTX 1900cc	85	SOLEX 34/34 Z1	A	F059	F059.1
PEUGEOT	305 GTX 1900cc	85	WEBER 34 DRTC	A	W537	W537.1
PEUGEOT	305 GTX 1900cc	85	WEBER 34 DRTM	M	W537	W537.1
PEUGEOT	305 GR - SR 1600cc	85	WEBER 36 TLP 1 /100	M	W534	
PEUGEOT	309	87	WEBER 34 TLP	M	W534	
PEUGEOT	309 - 309 GL - GR - PROFIL	83	SOLEX 32 BISA 9	M	F066	
PEUGEOT	309 - 309 GL - GR - PROFIL	83	WEBER 32 IBSH 13	M	W532	
PEUGEOT	309 GT 1600cc	85	WEBER 36 TLP 6/200	A	W534	
PEUGEOT	309 GT 1900cc	86	SOLEX 34/34 Z1	A	F059	F059.1
PEUGEOT	309 GT 1900cc	86	WEBER 34 DRTC	A	W537	W537.1
PEUGEOT	309 GT 1900cc	86	WEBER 34 DRTM	M	W537	W537.1
PEUGEOT	403 - 404 - 504 L	-75	SOLEX 32/34 PBICA	M	F019	
PEUGEOT	404 BERLINA	72	SOLEX 32 PBISA	M	F012	
PEUGEOT	404 - 504 L	75-	SOLEX 34 BICSA	M	F054	
PEUGEOT	404 1618cc	70-75	WEBER CONV. 24 ICH	M	W287	
PEUGEOT	405 GL - GR	88	SOLEX 34/34 Z1	A	F059	F059.1
PEUGEOT	504 GL 2000cc	-74	SOLEX 32/35 SEIEA	A	F020	F020.1
PEUGEOT	504 GL 2000cc	-74	ZENITH 35/40 INAT	A	F022	
PEUGEOT	504 GL 1971cc	75-82	WEBER CONV. 32 DIR	M	W250	W298
PEUGEOT	504 GL 1971cc	75-82	WEBER CONV. 32 DAR	A	W558	
PEUGEOT	504 GL 1971cc	75-86	WEBER CONV. 32/36 DGV	M	W141	
PEUGEOT	504 GR -SR - BREAK 2000cc	74-	SOLEX 32/35 MIMSA	M	F021	
PEUGEOT	504 GR -SR - BREAK 2000cc	74-	SOLEX 32/35 TMIMA	A	F021	F021.1
PEUGEOT	504L 1796cc	73-82	WEBER CONV. 34 ICH	M	W287	
PEUGEOT	505 1971cc	79-87	WEBER CONV 32 DIR	M	W250	W298
PEUGEOT	505 1971cc	79-87	WEBER CONV. 32 DAR	A	W558	
PEUGEOT	505 1971cc	75-86	WEBER CONV. 32/36 DGV	M	W141	
PEUGEOT	505 GL BREAK	81	SOLEX 34 BICSA	M	F054	

Carburettor Service Kits Applications

MAKE	MODEL	YEAR	CARB MODEL	CHOKE	KIT NO.	INC. DIAPHRAGM
PEUGEOT	505	81	SOLEX 32/35 TMIMA	A	F021	F021.1
PEUGEOT	505SL-GL-GR 1800cc	85	SOLEX 32/34 Z2	M	F059	
PEUGEOT	505SL-GL-GR 1800cc	86	SOLEX 34/34 Z1	A	F059	F059.1
PEUGEOT	505 GR - SR	79	ZENITH 35/40 INAT	A	F022	
PEUGEOT COMM						
PEUGEOT COMM	J7 1600cc	75	SOLEX 32 PBICA	M	F019	
PEUGEOT COMM	J7 - J9 1600 cc - 2000cc	80	SOLEX 32 BICSA	M	F054	
PEUGEOT COMM	J5 1300 - 1100cc	81	SOLEX 34 PBISA	M	F047	
PORSCHE						
PORSCHE	911 L 6 cyl. 1991cc	69	WEBER 40 IDAP	M	W559	
PORSCHE	911 T 6 cyl. 1991cc	69	WEBER 40 IDTP	M	W559	
PORSCHE	1 1 T 6 cyl. 2.2 - 2.4	73	ZENITH 40 TIN	M	G048	
PORSCHE	12 4 cyl. 1582cc	69	SOLEX 40 PII	M	G046	
PORSCHE	CARRERA 4 cyl. 1582cc	65	SOLEX 40 PII	M	G046	
PORSCHE	1600 cc	65	SOLEX 32 NDIX	M	G047	
RENAULT						
RENAULT	R4 L 850cc	78	ZENITH 28 IF	M	F025	
RENAULT	R4 L 850cc	78	SOLEX 26 DIS	M	F024	
RENAULT	R4 850cc	83	ZENITH 32 IF7	M	F042.1	
RENAULT	R4 TL 950cc	86	ZENITH 28 IF	M	F025	F025.1
RENAULT	R4 GTL 1100cc	82	ZENITH 28 IF	M	F025	
RENAULT	R4 LS - GTL 850 cc - 1100cc	79	SOLEX 32 SEIA - EISA	M	F026	
RENAULT	R5 L - TL 850 - 950 - 1300cc	76	SOLEX 32 SEIA	M	F026	
RENAULT	R6 L - TL 850 - 950 - 1300cc	76	SOLEX 32 SEIA	M	F026	
RENAULT	R5 L - TL 850 - 950cc	80	SOLEX 32 DIS	M	F027	
RENAULT	R6 L - TL 850 - 950cc	80	SOLEX 32 DIS	M	F027	
RENAULT	R5 GTL 1100cc	84	ZENITH 32 IF7	M	F042	
RENAULT	R5 GTL 1100cc	84	SOLEX 32 DIS	M	F027	
RENAULT	R5 TS 1300cc	77	WEBER 32 DIR	M	W250	W250.1
RENAULT	R5 ALPINE 1400cc	77	WEBER 32 DIR	M	W250	W250.1
RENAULT	R5 TS 1300cc	78	WEBER 32 DIR	M	W250	W250.2
RENAULT	R5 ALPINE TURBO 1400cc	77	WEBER 32 DIR	M	W250	W250.3
RENAULT	R5 ALPINE TURBO	78	WEBER 32 DIR	M	W298	W298.1
RENAULT	R5 1400 AUTOMATIC	78	WEBER 32 DIR	M	W298	W298.1
RENAULT	SUPER 5 950 cc - 11 00cc	84	SOLEX 32 BIS	M	F063	
RENAULT	SUPER 5 950 cc - 11 00cc	84	ZENITH 32 IF2	M	F044	
RENAULT	SUPER 5 1400cc	84	SOLEX 32 BIS	M	F067	
RENAULT	SUPER 5 TSE 1400cc	87	WEBER 32 DRT	M	W527	W527.1
RENAULT	SUPER 5 LIMITED 1700cc	88	SOLEX 28/34 Z10	M	F056	
RENAULT	SUPER 5 GT TURBO	84	SOLEX 32 DIS	M	F052	
RENAULT	R9 - RII C - TC - GTC 1108cc	-82	ZENITH 32 IF2	M	F061	
RENAULT	R9 - RII C - TC - GTC 1108cc	-83	SOLEX 32 BIS	M	F048	
RENAULT	R9 - RII C - TC - GTC 1108cc	82-	ZENITH 32 IF2	M	F044	
RENAULT	R9 - RII C - TC - GTC 1108cc	83-	SOLEX 32 BIS	M	F063	
RENAULT	R9 - RI1 1397 cc	83-	SOLEX 32 BIS	M	F062	
RENAULT	R9 GTL - TSE 1397cc	-82	WEBER 32 DRTM	M	W293	W293.1
RENAULT	R9 GTL - TSE 1397cc	-82	WEBER 32 DRTA	A	W293	W293.1
RENAULT	R9 GTL - TSE 1397cc	82-	WEBER 32 DRT	M	W527	W527.1
RENAULT	R9 - R11 TURBO	83	SOLEX 32 DIS	M	F052	
RENAULT	R11 GTX - TXE 1700cc	86	SOLEX 28/34 Z10	M	F056	
RENAULT	R12 L - TL 1300cc	78	SOLEX 32 EISA - SEIA	M	F026	
RENAULT	R12 TS - TA 1300cc		WEBER 32 DIR 39	M	W250	W250.3
RENAULT	R12 TS - TM 1400cc		WEBER 32 DIR 61	M	W250	W250.2
RENAULT	R12 TS - TM 1400cc		WEBER 32 DARA	A	W298	W298.1
RENAULT	R14 L - TL	78	SOLEX 32 SHA	M	F034	
RENAULT	R14 TL - GTL 1200 - 1400cc	79	SOLEX 32 PBISA 11	M	F035	
RENAULT	R14 TL	79	WEBER 32 IBR	M	W340	
RENAULT	R14 TS 1400cc	-79	SOLEX 32/32 MIMSA	M	F069	
RENAULT	R14 TS 1400cc	79-	SOLEX 32/35 CICSA	M	F014	F014.1

MAKE	MODEL	YEAR	CARB MODEL	CHOKE	KIT NO.	INC. DIAPHRAGM
RENAULT	R15 TL - TS 1300 - 1600cc	77	WEBER 32 DIR	M	W250	W250.2
RENAULT	R15 TL - TS 1300 - 1600cc	77	WEBER 32 DARA	A	W298	W298.1
RENAULT	R16 TS - TL 1565cc	75	WEBER 32 DIR 34	M	W250	W250.2
RENAULT	R16 TS - TL 1565cc	75	SOLEX 32 SEIEA	M	F016	
RENAULT	R16 TS - TL 1565cc	75	SOLEX 32 MIMAT	M	F065	
RENAULT	R16 TL - TX -TM 1565 -1647cc	76	WEBER 32 DAR	A	W298	W298.1
RENAULT	R16 TL - TX -TM 1565 -1647cc	76	SOLEX 32 SEIEA	A	F020	F020.1
RENAULT	R16 TL - TX -TM 1565 -1647cc	76	SOLEX 32 MIMAT	A	F065	
RENAULT	R17 TL 1565cc	75	WEBER 32 DIR	M	W250	W250.2
RENAULT	R17 TL - TS 1647cc	79	WEBER 32 DARA	A	W298	W298.1
RENAULT	R18 TL - GTL 1400cc	81	SOLEX 32 SEIA	M	F049	
RENAULT	R18 TL - GTL 1400cc	81	ZENITH 32 IF	M	F053	
RENAULT	R18 TS - GTS 1600cc	81	SOLEX 35 EITA	A	F050	
RENAULT	RI8 TS - GTL - GTL AMERICA	81	WEBER 32 DIR	M	W250	W250.2
RENAULT	RI8 TS - GTL - GTL AMERICA	81	WEBER 32 DARA	A	W298	W298.1
RENAULT	RI8 TS - GTL - GTL AMERICA	81	SOLEX 32/35 MIMAT	M	F065	
RENAULT	R18 TX - GTX 2000cc	82	WEBER 32 DARA	A	W558	W558.1
RENAULT	R18 TURBO		SOLEX 32 DIS	M	F052	
RENAULT	FUEGO 1400cc	89	SOLEX 32 SEIA	M	F049	
RENAULT	FUEGO 1400cc	89	ZENITH 32 IF	M	F053	
RENAULT	FUEGO COUPE 1700cc	80	WEBER 32 DARA	A	W298	W298.1
RENAULT	FUEGO TX - GTX 2000cc	84	WEBER 32 DARA	A	W558	W558.1
RENAULT	FUEGO GT TURBO	83	SOLEX 32 DIS	M	F052	
RENAULT	CLIO RL - RN 1.1	90	SOLEX 32 BIS	M	F063	
RENAULT	CLIO RL - RN - RT 1.2	90	PIERBURG 32 1BI	G	G050	
RENAULT	CLIO RN - RT 1.4	90	WEBER 32 TLDR	M	W554	
RENAULT	CLIO RT 1.7	90	SOLEX 32/34 ZI 3	M	F068	
RENAULT	R19 TR - GTR - TRE 1.3	89	SOLEX 32 BIS	M	F067	
RENAULT	R19 TR - GTR 1.4	89	ZENITH 32 1F2	M	F044	
RENAULT	R19 TS - GTS - TSE 1.4	89	WEBER 32 TLDR	M	W554	
RENAULT	R19 GTX - TXE 1.7	89	SOLEX 32/34 Z13	M	F068	
RENAULT	R20 TL - TM	79	WEBER 32 DARA	A	W298	W298.1
RENAULT	R20 TA - TS 2000cc	84	WEBER 32 DARA	A	W558	W558.1
RENAULT	R20 TX 2000cc	84	WEBER 32/36 DARA	A	W557	W557.1
RENAULT	R21 TS - GTS - RS - TSE	86	SOLEX 28/34 ZI0	M	F056	F056.1
RENAULT	R21 NEVADA 1700cc	86	SOLEX 28/34 ZI0	M	F056	F056.1
RENAULT	R21 2000 cc	86	WEBER 32 DARA 59	A	W558	W558.1
RENAULT	ESPACE TSE 2000cc	84	WEBER 32 DARA 40	A	W558	W558.1
RENAULT	R25 TS - GTS 2000cc	83	WEBER 28/36 DARA	A	W538	W538.1
RENAULT	R30 TS		WEBER 38 DGAR	A	W484	W484.1
RENAULT COMM						
RENAULT COMM	EXPRESS F400 950cc	85	ZENITH 28 IF	M	F025	F025.1
RENAULT COMM	EXPRESS F402 1108cc	86	ZENITH 32 IF2	M	F044	
RENAULT COMM	EXPRESS F402 1108cc	86	SOLEX 32 BIS	M	F067	
RENAULT COMM	TRAFIC 1400cc	80	ZENITH 32 IF	M	F053	
RENAULT COMM	TRAFIC - MASTER	81	SOLEX 35 SEIA	M	F050	
ROVER	(See AUSTIN ROVER)					
PAGE 10						
PAGE 10						
SAAB						
SAAB	95 - 96 1498cc	75	FOMOCO 1250 AUTOLITE		G031	
SAAB	99 820 1985cc	75	STROMBERG 175 CDS	A	G038	
SAAB	99 B20 1985cc	74	STROMBERG 2x150 CD		G037	
SAAB	900 1985cc	79	STROMBERG 175 CDSEV		G038	
SAAB	900 1985cc	79	STROMBERG 2x150 CD		G037	
SEAT						
SEAT	PANDA 35 850cc		WEBER 32 ICEV	M	W374	
SEAT	MARBELLA 903cc		WEBER 32 ICEV	M	W374	
SEAT	FURA 900 cc		WEBER 32 ICEV	M	W374	
SEAT	FURA 900 cc		SOLEX 32 DISA 7	M	I081	

MAKE	MODEL	YEAR	CARB MODEL	CHOKE	KIT NO.	INC. DIAPHRAGM
SEAT	IBIZA 900cc		WEBER 32 ICEV	M	W374	
SEAT	IBIZA 1.2		PIERBURG 36 IB3	A	G005	
SEAT	RONDA 1.2		PIERBURG 36 IB3	A	G005	
SEAT	MALAGA 1.2		PIERBURG 36 IB3	A	G005	
SEAT	IBIZA 1.5		WEBER 32 DSTA	A	W527	W527.2
SEAT	RONDA 1.5		WEBER 32 DSTA	A	W527	W527.2
SEAT	MALAGA 1.5		WEBER 32 DSTA	A	W527	W527.2
SEAT	RONDA 1600cc		WEBER 34 DAT 14/151	M	W389	W389.1
SEAT	124 D		SOLEX 32 EIES	M	I052	
SEAT	124 D		WEBER 32 DHS	M	W038	
SKODA						
SKODA	100 - 105 S - 110 - 120	83	JKOV 32 EDSR	M	W540	
SKODA	FAVORIT	88	SOLEX 30/32 Z	M	F058	F058.1
SUBARU						
SUBARU	LEONE 1300 - 1400	79	HITACHI DCP 306		J313	
SUBARU	LEONE 1600 - 1800 4WD	80	HITACHI DCJ - DCP 306		J321	
SUBARU	LEONE 1800 4WD	84	HITACHI DCX 328		J325	
SUZUKI						
SUZUKI	SJ 410 4WD 970 cc	83	AISAN	M	J222	
SUZUKI	SJ 413 4WD 1324cc	83	AISAN 6EE	A	J224	
SUZUKI	ALTO SS80 796cc	81	MIKUNI - SOLEX 24/30 DIDS	M	J604	
SUZUKI	SC 100 4 cyl. 970cc	79	MIKUNI - SOLEX 30 PHD	M	J601	
SUZUKI	SJ 20 4WD 797cc	80	MIKUNI - SOLEX 32 PHD	M	J601	
SUZUKI	ST 80 - ST 90 797cc	81	MIKUNI - SOLEX 30 PHD	M	J601	
SUZUKI	SAMURAI 413		WEBER CONV. 32 DGR	M	W140	
TALBOT						
TALBOT	ALPINE 1.3 GL - LS	79	SOLEX 32 BISA	M	F039	F039.1
TALBOT	ALPINE 1.3 GL - LS	79	WEBER 32 IBSA - IBSH	M	W219	
TALBOT	ALPINE 1.5 S	79	WEBER 36 DCNV	M	W234	
TALBOT	ALPINE 1.5 S	82	WEBER 36 DCNVH	M	W222	
TALBOT	ALPINE 1.6 GLS - SX	79	WEBER 36 DCNVH	M	W222	
TALBOT	AVENGER 1.3 GL - LS	82	STROMBERG 150 CD	M	G037	
TALBOT	AVENGER 1.6 GL - LS	82	STROMBERG 150 CD	M	G037	
TALBOT	AVENGER 1.6 GLS	82	STROMBERG 175 CD	A	G038	
TALBOT	HORIZON 1100 - 1300 - 1307	83	SOLEX 32 BISA 6-7-8	M	F039	F039.1
TALBOT	HORIZON 1100 - 1300 - 1307	83	WEBER 32 IBSH	M	W219	
TALBOT	HORIZON 1500 GL	78	SOLEX 32 BISA	M	F039	F039.1
TALBOT	HORIZON 1500 GLS	78	WEBER 36 DCNVH	M	W222	
TALBOT	HORIZON 1500 GLS	78	WEBER 36 DCA	A	W222	
TALBOT	HORIZON 1600 GT	83	WEBER 36 DCNVH	M	W222	
TALBOT	MATRA BAGHERA 1.3 - 1.5	79	WEBER 2x36 DCNFA	M	W234	
TALBOT	MATRA MURENA 1.6	83	WEBER 36 DCNVH	M	W222	
TALBOT	MATRA MURENA 2.2	83	SOLEX 34 CIC	M	F009	
TALBOT	MATRA MURENA 2.2 S	83	SOLEX 2x40 ADDHE	M	I096	
TALBOT	MATRA RANCH 1.5	80	WEBER 2x36 DCNVA 12/100	M	W222	
TALBOT	SAMBA LS -GL 950cc - 1100cc	83	SOLEX 32 PBISA 11	M	F039	F039.1
TALBOT	SAMBA LS -GL 950cc - 1100cc	83	SOLEX 32 PBISA 12	M	F035.1	
TALBOT	SAMBA LS -GL 950cc - 1100cc	83	WEBER 32 IBSH	M	W219	
TALBOT	SAMBA GLS - CABRIO 1400cc	81	SOLEX 32/35 TACIC	A	F014	F014.1
TALBOT	SAMBA RALLY	83	WEBER 2x40 DCOE	M	W004	
TALBOT	SAMBA 80 HP 1360 cc	84	SOLEX 2x35 BISA	M	F051	
TALBOT	SAMBA 80 HP 1360 cc	84	WEBER 2x35 IBSH	M	W533	
TALBOT	SOLARA LS-GL 1300-1400cc	83	SOLEX 32 BISA 6-7	M	F039	F039.1
TALBOT	SOLARA LS-GL 1300-1400cc	83	SOLEX 35 BISA 7-8	M	F015	
TALBOT	SOLARA LS-GL 1300-1400cc	83	WEBER 32 IBSH	M	W219	
TALBOT	SOLARA GL 1500 cc	80	WEBER 36 DCNVH	M	W222	
TALBOT	SUNBEAM ALPINE 1800cc	76	STROMBERG 150 CD	M	G037	
TALBOT	SUNBEAM AVENGER TIGER	79	WEBER 2x40 DCOE	M	W004	
TALBOT	SUNBEAM RAPIER	76	WEBER 2x40 DCOE	M	W004	
TALBOT	SUNBEAM 1.0 - 1.3 -1.6	81	STROMBERG 150 CD	M	G037	

MAKE	MODEL	YEAR	CARB MODEL	CHOKE	KIT NO.	INC. DIAPHRAGM
TALBOT	SUNBEAM 1.0 - 1.3 -1.6	81	S.U. HS4 CAPSTAT	M	S002	
TALBOT	SUNBEAM 1.6 GLS	81	STROMBERG 175 CD	A	G038	
TALBOT	SUNBEAM 424 1.0 - 1.3 - 1.6	78	STROMBERG 150 CD	M	G037	
TALBOT	SUNBEAM 424 1.0 - 1.3 - 1.6	78	S.U. HS4 CAPSTAT	M	S003	
TALBOT	SUNBEAM 930 GL - LS	81	STROMBERG 150 CD	M	G037	
TALBOT	SUNBEAM 1300 GLS - GT	81	STROMBERG 175 CD	A	G038	
TALBOT	HUNTER GT - 1725 - 1500	79	STROMBERG 150 CDS	M	G037	
TALBOT	HUNTER GT - 1725 - 1500	79	S.U. HS4 CAPSTAT	M	S002	
TALBOT	M24 SPAGNA 1200 - 1290	84	WEBER 32 IBSH 12/1 01	M	W219	
TALBOT	150 GL - LS 1500 - 1600	80	WEBER 36 DCNVH	M	W222	
TALBOT	160 GT - 180	79	WEBER 34 ADSD	A	W107	
TALBOT	1000 GL	78	SOLEX 32 BICSA	M	F037	
TALBOT	1000 GL	78	WEBER 32 IBR	M	W073	
TALBOT	1000 RALLY 1	77	SOLEX 34 BICSA	M	F037	
TALBOT	1000 RALLY 11	76	SOLEX 2x35 PHHE	M	F008	
TALBOT	1000 - 1100	83	SOLEX 32 BISA 5-7	M	F039	F039.1
TALBOT	1000 - 1100	83	WEBER 32 IBSA 18/100	M	W219	
TALBOT	1100 1.3	78	WEBER 36 DCNF	M	W234	
TALBOT	1301 - 1501 S	75	SOLEX 28/35 SDIDA	M	F040	
TALBOT	1301 - 1501 S	75	WEBER 28/36 DCB	M	W074	
TALBOT	1307 LS	82	SOLEX 32 BISA 6-7	M	F039	F039.1
TALBOT	ALPINE	82	WEBER 32 IBSA 20/100	M	W219	
TALBOT	1307 ALPINE GLS	82	WEBER 36 DCNVH	M	W222	
TALBOT	ALPINE S - TI	75	WEBER 36 DCNF 50/150	M	W234	
TALBOT	1308 LS	82	WEBER 32 IBSH	M	W219	
TALBOT	1308 GT - 1309 GLS	81	WEBER 36 DCNVA	M	W222	
TALBOT	1510 1.3 GLS	82	WEBER 36 DCNVH.	M	W222	
TALBOT	1510 1.5 LS	82	SOLEX 32 BISA 6-7	M	F039	F039.1
TALBOT	1510 1.5 LS	82	SOLEX 32 BISA 7-8	M	F015	
TALBOT	1510 1.5 LS	82	WEBER 32 IBSH	M	W219	
TALBOT	1510 1.5 GL - GLS	82	WEBER 36 DCNVH	M	W222	
TALBOT	1510 1.6 SX	82	WEBER 36 DCNVH	M	W222	
TALBOT	TAGORA GL - GLS	83	SOLEX 32/35 TMIMA	A	F064	
TOYOTA						
TOYOTA	1000	78	AISAN	A	J207	
TOYOTA	CARINA 1588cc	72-84	WEBER CONV. 32/34 DMTL		W561	
TOYOTA	CELICA 1600	81	AISAN	A	J200	
TOYOTA	CARINA 1800	82	AISAN	A	J211	
TOYOTA	CELICA 2000	82	AISAN	A	J211	
TOYOTA	COROLLA / STARLET 1295cc	85-90	WEBER CONV. 32/34 DMTL	M	W561	
TOYOTA	COROLLA 1200 - 1300 FWD	83	AISAN	A	J207	
TOYOTA	COROLLA 1600	83	AISAN	A	J200	
TOYOTA	CORONA 1800 - 2000	80	AISAN	A	J211	
TOYOTA	CRESSIDA 2000 4 cyl.	82	AISAN	A	J211	
TOYOTA	SPACE CRUISER 1812cc (2Y)	83-85	WEBER CONV. 32/34 DMTL	M	W561	
TOYOTA	SPACE CRUISER 1998cc (3Y)	85-90	WEBER CONV. 32/34 DMTL	M	W561	
TOYOTA	SPACE CRUISER	83	AISAN	A	J211	
TOYOTA	STARLET 1.0 GL - 1.2 - 1.3	83	AISAN	A	J207	
TOYOTA	TERCEL 1300 - 1500 4WD	83	AISAN	A	J207	
TOYOTA	LAND CRUISER		AISAN	A	J203	
TOYOTA COMM						
TOYOTA COMM	HI ACE 1600 VAN - PICK-UP	83	AISAN	A	J200	
TOYOTA COMM	HI LUX 1600 PICK-UP	83	AISAN	A	J200	
TOYOTA COMM	HI ACE 1800 - 2000 VAN	82	AISAN	A	J211	
TOYOTA COMM	HI LUX 2000 PICK-UP 4WD	82	AISAN	A	J211	
TRIUMPH						
TRIUMPH	DOLOMITE 1.3 - 1.5	80	S.U. HS4 CAPSTAT	M	S003	
TRIUMPH	DOLOMITE 1850	73	STROMBERG 150 CD	M	G037	
TRIUMPH	DOLOMITE 1850	76	S.U. HS4	M	S001	
TRIUMPH	DOLOMITE 1850	80	S.U. HS4 CAPSTAT	M	S003	

MAKE	MODEL	YEAR	CARB MODEL	CHOKE	KIT NO.	INC. DIAPHRAGM
TRIUMPH	DOLOMITE SPRINT	76	S.U. HS6	M	S002	
TRIUMPH	DOLOMITE SPRINT	80	S.U. HS6 CAPSTAT	M	S006	
TRIUMPH	SPITFIRE MKI - 11 - III - IV - V	74	S.U. HS2	M	S001	
TRIUMPH	SPITFIRE 1500	74	STROMBERG 150 CD	M	G037	
TRIUMPH	SPITFIRE 1500	76	S.U. HS4	M	S001	
TRIUMPH	SPITFIRE 1500	80	S.U. HS4 CAPSTAT	M	S003	
TRIUMPH	STAG V8 - TR6	77	STROMBERG 175 CDS	A	G038	
TRIUMPH	TOLEDO 1.3 - 1.4	76	S.U. HS4	M	S001	
TRIUMPH	TR7	76	S.U. HS6	M	S002	
TRIUMPH	TR7	81	S.U. HS6 CAPSTAT	M	S006	
TRIUMPH	TR8	81	STROMBERG 175 CDSET	A	G038	
TRIUMPH	VITESSE MKI - 11	72	STROMBERG 150 CD	M	G037	
TRIUMPH	1300 - 1500	71	S.U. HS2	M	S001	
TRIUMPH	1500 TC	77	S.U. HS4 CAPSTAT	M	S006	
TRIUMPH	2000	74	STROMBERG 150 CD	M	G037	
TRIUMPH	2000 TC - 2500 TC	76	S.U. HS6	A	S002	
TRIUMPH	2000 TC - 2500 TC	77	S.U. HS6 CAPSTAT	A	S006	
TRIUMPH	ACCLAIM 1335 cc	83	KEIHIN DA76 B	A	J753	
VAUXHALL						
VAUXHALL	ASTRA 1200	84	WEBER 32 TL	M	W392	
VAUXHALL	ASTRA 1200	80	PIERBURG 35 PDSI	A	G018	
VAUXHALL	ASTRA / BELMONT 1297cc	79-84	WEBER CONV. 32/34 DMTL	M	W561	
VAUXHALL	ASTRA / BELMONT 1297cc	79-84	WEBER CONV. 32/34 DMTL	A	W561	
VAUXHALL	ASTRA / BELMONT 1297cc	84-89	WEBER CONV. 32/34 DMTL	M	W561	
VAUXHALL	ASTRA / BELMONT 1297cc	84-89	WEBER CONV. 32/34 DMTL	A	W561	
VAUXHALL	ASTRA 1300	84	PIERBURG 28/30 2E3	A	G044	
VAUXHALL	ASTRA / BELMONT 1389cc	89	WEBER CONV. 32/34 DMTL	M	W561	
VAUXHALL	ASTRA / BELMONT 1598cc	79-86	WEBER CONV. 32/34 DMTL	M	W561	
VAUXHALL	ASTRA / BELMONT 1598cc	81-86	WEBER CONV. 32/34 DMTL	A	W561	
VAUXHALL	ASTRA / BELMONT 1598cc	86-91	WEBER CONV. 32/34 DMTL	A	W561	
VAUXHALL	ASTRA / BELMONT 1598cc	86-91	WEBER CONV. 32/34 DMTL	M	W561	
VAUXHALL	ASTRA BELMONT 1196cc	79-84	WEBER CONV. 34 ICH	M	W288	
VAUXHALL	ASTRA BELMONT 1297cc	79-87	WEBER CONV. 34 ICH	M	W288	
VAUXHALL	ASTRA 1600	86	PIERBURG 28/30 2E3	A	G044	
VAUXHALL	ASTRA 1300 - 1600	82	VARAJET 11	A	G035	
VAUXHALL	CARLTON 1.8	86	PIERBURG 28/30 2E3	A	G044	
VAUXHALL	CARLTON 1.8 L - 2.0 L	82	VARAJET 11	A	G0355	
VAUXHALL	CAVALIER 1300	84	PIERBURG 28/30 2E3	A	G044	
VAUXHALL	CAVALIER 1300	78	STROMBERG 150 CDSEV	M	G037	
VAUXHALL	CAVALIER 1600	75	PIERBURG 32 DIDTA	A	G019	
VAUXHALL	CAVALIER 1300 - 1600 - 2000	81	VARAJET 11	A	G035	
VAUXHALL	CAVALIER 1900	75	PIERBURG 35/40 INAT	A	G020	
VAUXHALL	FIRENZA 1159cc	71	STROMBERG 150 CDS	M	G037	
VAUXHALL	FIRENZA 1600 - 1800	73	ZENITH 36 IV	M	G039	
VAUXHALL	FIRENZA 2000 - 2300	75	STROMBERG 2xl75 CD	A	G038	
VAUXHALL	MAGNUM 1800 - 2300 OHC	78	STROMBERG 175 CD	A	G038	
VAUXHALL	NOVA 1297cc	85-89	WEBER CONV. 32/34 DMTL	M	W561	
VAUXHALL	NOVA 1389cc	89-91	WEBER CONV. 32/34 DMTL	M	W561	
VAUXHALL	NOVA 1196cc	82-91	WEBER CONV. 36 TLP	M	W534	
VAUXHALL	NOVA 1297cc	83-87	WEBER CONV. 36 TLP	M	W534	
VAUXHALL	NOVA 1.0 L	83	WEBER 32 TL	M	W392	
VAUXHALL	NOVA 1.2 L - 1.3 L	83	PIERBURG 36 1BI	M	G0051	
VAUXHALL	NOVA 1.2 L - 1.3 L	83	WEBER 32 TL	M	W392	
VAUXHALL	NOVA 1.3 NVH - 1.4 NVH	88	PIERBURG 28/30 2E3	A	G044	
VAUXHALL	ROYALE 2800	78	PIERBURG 32/54 4AI	A	G012	
VAUXHALL	ROYALE 3000	81	PIERBURG 32/54 4A1	A	G012	
VAUXHALL	VICEROY 2.5	81	PIERBURG 35/40 INAT	A	G020	
VAUXHALL	VICTOR 1599cc FD	67-71	WEBER CONV. 34 ICH	M	W288	
VAUXHALL	VICTOR 1759cc FE	72-75	WEBER CONV. 34 ICH	M	W288	
VAUXHALL	VICTOR 1600 - 1800	75	ZENITH 36 IV	M	G039	

MAKE	MODEL	YEAR	CARB MODEL	CHOKE	KIT NO.	INC. DIAPHRAGM
VAUXHALL	VICTOR 2000 - 2300	75	STROMBERG 175 CD	A	G038	
VAUXHALL	VIVA 1159cc HB	66-70	WEBER CONV. 34 ICH	M	W288	
VAUXHALL	VIVA 1159cc HC	70-71	WEBER CONV. 34 ICH	M	W288	
VAUXHALL	VIVA 1256cc HC	71-73	WEBER CONV. 34 ICH	M	W288	
VAUXHALL	VIVA 1599cc HB	68-70	WEBER CONV. 34 ICH	M	W288	
VAUXHALL	VIVA 1599cc HC	70-73	WEBER CONV. 34 ICH	M	W288	
VAUXHALL	VIVA 1759cc HC	72-74	WEBER CONV. 34 ICH	M	W288	
VAUXHALL	VIVA 90 1300	70	STROMBERG 150 CD	M	G037	
VAUXHALL	VIVA 1600 - 1800	75	ZENITH 36 IV	M	G039	
VAUXHALL	VIVA 1800	79	STROMBERG 175 CD	A	G038	
VAUXHALL	VX 1800 - 2300	78	STROMBERG 175 CD	A	G038	
VAUXHALL	VAN HAV - CF 1300cc	82	WEBER 32 ICT	M	W260	
VAUXHALL	VAN HAV - CF 1800 cc	82	WEBER 34 ICT	M	W292	
VW						
VW	1200cc	70	PIERBURG 28 PICT	A	G022	
VW	1200cc - 1300cc	78	PIERBURG 30 PICT	A	G025	
VW	1303 S - 1300cc - 1600cc	79	PIERBURG 31 PICT	A	G025	
VW	1302 S - 1600cc	72	PIERBURG 34 PICT	A	G025	
VW	POLO 900cc	79	PIERBURG 31 PICT 5	A	G040	
VW	POLO 900cc	81	PIERBURG 31 PICT 6	M	G002	
VW	POLO 1050cc	81	PIERBURG 31 PIC 7	M	G026	
VW	POLO 1050cc	86	WEBER 32 TLA 1/251	A	W541	W541.1
VW	POLO 1050cc	86	PIERBURG 32 1BI	A	G005.1	
VW	POLO 1100 cc	78	PIERBURG 31 PICT	A	G002	
VW	POLO S - LS 1100cc	81	PIERBURG 31 PIC 6-7	M	G026	
VW	POLO GLS 1300	81	PIERBURG 34 PIC 5-6	A	G041	
VW	POLO COUPE 1300cc	82	PIERBURG 28/30 2E3	A	G043	
VW	DERBY GLS	82	PIERBURG 28/30 2E3	A	G043	
VW	DERBY 900cc - 1050cc	81	PIERBURG 31 PIC 6-7	A	G002	
VW	DERBY S - LS 1100cc	81	PIERBURG 31 PIC 6-7	A	G025	
VW	DERBY GLS 1300cc	81	PIERBURG 34 PIC 6	A	G041	
VW	GOLF 1100cc	77	PIERBURG 31 PICT	A	G002	
VW	GOLF 1100cc	78	PIERBURG 31 PICT 5	M	G025	
VW	GOLF 1100cc	79	PIERBURG 31 PICT 5	M	G040	
VW	GOLF 1100cc	81	PIERBURG 31 PIC 6-7	M	G026	
VW	GOLF 1300cc	81	PIERBURG 34 PIC 5-6	M	G041	
VW	GOLF 1300cc TYP 19	83	PIERBURG 24/28 2E3	A	G044	
VW	GOLF S - LS - GLS 1460cc	79	PIERBURG 34 PICT 5	M	G027	
VW	GOLF S - LS - GLS 1460cc	84	PIERBURG 36 1B3	A	G005	
VW	GOLF S - LS - GLS 1500-1600	77	PIERBURG 34 PICT 5	M	G027	
VW	GOLF 1600cc TYP 19	83	PIERBURG 28/30 2E2	A	G044	
VW	GOLF 1800cc TYP 19	83	PIERBURG 28/30 2E2	A	G044	
VW	GOLF 1600cc - 1800cc	83	KEIHIN DE04A	A	J751	
VW	GOLF 1600cc	88	PIERBURG 28/30 2EE	A	G053	
VW	CADDY 1600cc	83	KEIHIN DE04A	A	J751	
VW	JETTA 1100cc	81	PIERBURG 31 PIC 6-7	M	G026	
VW	JETTA 1300cc	83	PIERBURG 24/28 2E3	A	G044	
VW	JETTA 1300cc	81	PIERBURG 34 PIC 5-6	M	G041	
VW	JETTA S - LS - GLS 1460cc	81	PIERBURG 36 IB3	A	G005	
VW	JETTA S - LS - GLS 1600cc	81	PIERBURG 34/34 2B5	A	G006	
VW	JETTA S-LS-GLS1600 -1800cc	83	PIERBURG 28/30 2E2	A	G044	
VW	JETTA 1600 cc	83	KEIHIN DE04A	A	J751	
VW	JETTA 1600 cc	88	PIERBURG 28/30 2EE	A	G053	
VW	SCIROCCO 1100cc	78	PIERBURG 31 PICT	M	G002	
VW	SCIROCCO 1100cc	79	PIERBURG 31 PICT 5	M	G040	
VW	SCIROCCO 1300cc	81	PIERBURG 34 PIC 6	M	G041	
VW	SCIROCCO 1300cc	83	PIERBURG 24/28 2E3	A	G044	
VW	SCIROCCO 1460cc	79	PIERBURG 34 PICT 5	M	G027	

MAKE	MODEL	YEAR	CARB MODEL	CHOKE	KIT NO.	INC. DIAPHRAGM
VW	SCIROCCO 1460cc	81	PIERBURG 36 IB3	A	G005	
VW	SCIROCCO 1500cc	75	PIERBURG 34 PICT 5	M	G027	
VW	SCIROCCO 1500cc	78	PIERBURG 34 PIC	A	G003	
VW	SCIROCCO TS 1500cc	75	PIERBURG 32/33 2B2	A	G006	
VW	SCIROCCO TS 1600cc	76	PIERBURG 34 PICT 5	M	G027	
VW	SCIROCCO TS1600 - 1800cc	81	PIERBURG 34/34 2B2-2B5	A	G006	
VW	SCIROCCO TS1600 - 1800cc	83	PIEREBURG 28/30 2E2	A	G044	
VW	PASSAT 1300cc	79	PIERBURG 35 PDSIT 5	A	G028	
VW	PASSAT 1300cc	82	PIERBURG 36 1BI	A	G005	
VW	PASSAT 1500cc	75	PIERBURG 35 PDSIT 5	A	G028	
VW	PASSAT 1500cc	75	PIERBURG 32/35 TDID	A	G042	
VW	PASSAT 1600cc	79	PIERBURG 35 PDSIT 5	A	G028	
VW	PASSAT 1600cc	80	PIEREBURG 36 1B3	A	G005	
VW	PASSAT 1600cc	83	PIERBURG 28/30 2E2	A	G044	
VW	PASSAT 1600 cc 63 CV	82	PIERBURG 34/34 2B2-2B5	A	G006	
VW	PASSAT 1600 cc - 1800cc	83	KEIHIN DE04A	A	J751	
VW	PASSAT 1600cc	88	PIERBURG 28/30 2EE	A	G053	
VW	PASSAT 1800cc	82	PIERBURG 28/30 2E2	A	G044	
VW	PASSAT 1900cc	80	PIERBURG 34/34 2B5	A	G006	
VW	PASSAT 1900cc - 2200cc	83	PIERBURG 34/34 2B5-2B7	A	G051	
VW	SANTANA 1600cc 55 CV	82	PIERBURG 36 1B3	A	G005	
VW	SANTANA 1600cc 63 CV	82	PIERBURG 34/34 2B5	A	G006	
VW	SANTANA 1600cc 55 CV	83	PIERBURG 28/30 2E2	A	G005	
VW	SANTANA 1800cc	82	PIERBURG 28/30 2E2	A	G044	
VW	SANTANA 1900cc	82	PIERBURG 34/34 2B5	A	G006	
VW	ILTIS 1700cc	78	PIERBURG 36 1B3	A	G005	
VW PICK-UP						
VW PICK-UP	1300	75	PIERBURG 31 PICT 3	A	G025	
VW PICK-UP	1600 35 CV	70	PIERBURG 30 PICT	A	G025	
VW PICK-UP	1700 - 1800 - 2000 50 CV	75	PIERBURG 2x34 PDSIT 4/5	A	G028	
VW PICK-UP	1900 44 CV	82	PIERBURG 34 PICT 5	A	G024	
VW PICK-UP	1900 57 CV	82	PIERBURG 28/30 2E3	A	G044	
VOLVO						
VOLVO	140 SERIE BI 8	68	STROMBERG 2xl75 CD	A	G038	
VOLVO	140 SERIE B20A-B	70	S.U. HS6	A	S002	
VOLVO	140 SERIE B20A-B	74	S.U. HIF 6	A	S007	
VOLVO	140 SERIE B20A-B	75	STROMBERG 2xl75 CDSE	A	G038	
VOLVO	240 SERIE B21A	77	S.U. HIF 6	A	S007	
VOLVO	240 SERIE 821A	84	STROMBERG 175 CDSE	A	G038	
VOLVO	240 SERIE B21A-B23A	84	STROMBERG 175 CDUS	A	G032	
VOLVO	340 SERIE B14	80	SOLEX 32 SEIA	M	F049	
VOLVO	340 SERIE B14	79	WEBER 32 DIR 83/100	M	W250	W250.2
VOLVO	340 SERIE B14	82	WEBER 32 DIR 104/100	M	W298	
VOLVO	360 SERIE BI9A	84	S.U. HIF 44	A	S010	
VOLVO	360 SERIE BI9A	84	STROMBERG 175 CDUS	A	G032	
VOLVO	360 SERIE BI 9A	86	SOLEX 28/34 Z10	A	F055	
VOLVO	740	86	PIERBURG 34/34 2B5-2B7	A	G051	
VOLVO	760 SERIE B28A	84	S.U. HIF 6	A	S007	
VOLVO	440 GLE	88	SOLEX 28/34 ZI0	A	F055	
ZASTAVA - YUGO						
ZASTAVA - YUGO	45 GL 903cc	83	WEBER 32 ICEV	M	W374	
ZASTAVA - YUGO	311 - 411 - 413	82	WEBER 32 ICEV	M	W374	
ZASTAVA - YUGO	850cc	72	WEBER 30 DIC	M	W024	
ZASTAVA - YUGO	1300 NOGORO	72	WEBER 32 DMTR	M	W179	
ZASTAVA - YUGO	125 PX	72	WEBER 34 DCHD	M	W040	

Outboard Marine Service Kit Applications

MARINE OUTBOARD			CARB MODEL	
BMW MARINE				
BMW MARINE		6cyl.	4A1 42/44	G012
CHRYSLER				
CHRYSLER	M318 B-M383-M413-M426-M440	8cyl.	AFB 3213-3214-3392 3543-4476	M166
MERCRUISER				
MERCRUISER	120-140	4cyl.	2GC 704-3182-3184 4182	M605
MERCRUISER	165	6cyl.	2GC 7043183	M605
MERCRUISER	470-485-488	4cyl.	2GV 7045197	M611A
MERCRUISER	888-23	8cyl.	2GV 7044185	M611A
MERCRUISER	888	8cyl.	2300 G317	M353
MERCRUISER	225-255	8cyl.	6407-6576	M350
MERCRUISER	898-198	8cyl.	2GV 17057139	M611A
MERCRUISER	228-260	8cyl.	4MV 17057298	M606A
MERCRUISER	255-280	8cyl.	4MV 7044290	M606A
MERCRUISER	330-350	8cyl.	4MV 7044286	M606A
OMC STN DRIVE/OMC COBRA				
OMC ST DRIVE/OMC COBRA	153 2.5	4cyl.		M600
OMC ST DRIVE/OMC COBRA	225 3.7	6cyl.		M600
OMC ST DRIVE/OMC COBRA	120-140-165	6cyl.		M605
OMC ST DRIVE/OMC COBRA	150 HRV6 GM	6cyl.		M605
OMC ST DRIVE/OMC COBRA	WITH HOLLEY	8cyl.	4150 FOUR-BARREL	M350
OMC ST DRIVE/OMC COBRA	WITH ROCHESTER	8cyl.	2GV DUAL-BARREL	M611A
OMC ST DRIVE/OMC COBRA	WITH ROCHESTER	8cyl.	4MV FOUR-BARREL	M606A
VOLVO PENTA				
VOLVO PENTA	AQ 115	4cyl.	150CD	G037
VOLVO PENTA	AQ 115	4cyl.	44 PAI 834527G037	M742
VOLVO PENTA	BB115A	4cyl.	175 CD	G038
VOLVO PENTA	BB115B	4cyl.	44 PAI	M742
VOLVO PENTA	AQ 120	4cyl.	175 CD	G038
VOLVO PENTA	AQ 130A	4cyl.	44 PAI	M742
VOLVO PENTA	AQ 130A E B	4cyl.	175 CD	G038
VOLVO PENTA	AQ 130C	4cyl.	44 PAI	M742
VOLVO PENTA	AQ 140 B21	4cyl.	44 PHN	M743
VOLVO PENTA	AQ 145 OHC	4cyl.	44 PAI	M742
VOLVO PENTA	AQ 165	6cyl.	175 CD	G038
VOLVO PENTA	AQ 170	6cyl.	44 PAI	M742
VOLVO PENTA	BB 170B	6cyl.	44 PAI	M742
VOLVO PENTA	155 V6 GM ENGINE	6cyl.	4MV ROCHESTER	M606A
VOLVO PENTA	VS GM ENGINE	8cyl.	2BBL CARTER	M153

Inboard Marine Service Kit Applications

MARINE INBOARD		CARB MODEL	PART NO.
CHRYSLER			
CHRYSLER	3.6HP - 4.5HP - 6HP - 8HP	TILLOTSON	M16001A
CHRYSLER	9.9HP - 10HP - 12HP - 12.9HP	TILLOTSON	M16001A
CHRYSLER	15HP - 20HP - 25HP - 30HP	TILLOTSON	M16001A
CHRYSLER	35HP - 45HP - 50HP - 55HP	TILLOTSON	M16001A
CHRYSLER	60HP - 70HP - 75HP - 85HP	TILLOTSON	M16001A
CHRYSLER	90HP - 105HP - 120HP - 130HP	TILLOTSON	M16001A
CHRYSLER	135HP-150HP	TILLOTSON	M16001A
JOHNSON - EVIN. (OMC)			
JOHNSON - EVIN. (OMC)	1.5HP-2HP-3HP-4HP	JOHNSON	M15942
JOHNSON - EVIN. (OMC)	5HP - 5.5HP - 6HP - 7.5HP	JOHNSON	M15942
JOHNSON - EVIN. (OMC)	1OHP - 15HP - 18HP - 20HP	JOHNSON	M15942
JOHNSON - EVIN. (OMC)	9.9HP - 15HP 74 - 9	JOHNSON	M16023
JOHNSON - EVIN. (OMC)	20HP - 25HP - 28HP - 30HP 69 - 9	JOHNSON	M15989A
JOHNSON - EVIN. (OMC)	35HP - 40HP - 45HP - 48HP	JOHNSON	M15989A
JOHNSON - EVIN. (OMC)	50HP - 55HP - 60HP - 65HP	JOHNSON	M15989A
JOHNSON - EVIN. (OMC)	70HP-75HP	JOHNSON	M15989A
JOHNSON - EVIN. (OMC)	25HP - 28HP - 30HP - 33HP	JOHNSON	M16031
JOHNSON - EVIN. (OMC)	35HP-40HP	JOHNSON	M16031
JOHNSON - EVIN. (OMC)	85HP - 88HP - 90HP - 100HP	JOHNSON	M15990A
JOHNSON - EVIN. (OMC)	II0HP - 11 5HP - 125HP - 135HP	JOHNSON	M15990A
JOHNSON - EVIN. (OMC)	140HP - 150HP - 155HP - 175HP	JOHNSON	M15990A
JOHNSON - EVIN. (OMC)	185HP - 200HP - 235HP - V4 - V6	JOHNSON	M15990A
MERCURY			
MERCURY	3.9HP - 4HP - 4.5HP - 6HP	TILLOTSON	M15981A
MERCURY	7.5HP - 9.8HP - 10HP - 15HP	TILLOTSON	M15981A
MERCURY	20HP - 22HP - 25HP - 35HP	TILLOTSON	M15981A
MERCURY	40HP - 45HP - 50HP - 60HP	TILLOTSON	M15981A
MERCURY	65HP - 70HP - 80HP - 85HP	TILLOTSON	M15981A
MERCURY	90HP - 95HP - 100HP - 110HP	TILLOTSON	M15981A
MERCURY	115HP - 125HP - 135HP	TILLOTSON	M15981A
MERCURY	40HP-65HP-80HP-85HP	MERCURY	M16008
MERCURY	90HP - 115HP - 135HP - 140HP	MERCURY	M16008
MERCURY	150HP	MERCURY	M16008

This page is intentionally blank

Manual Choke Conversions

What they do:
Change the operation of an automatic choke carburettor to manual operation, with choke control lever mounted within the driver compartment.

Advantages:
Improved fuel consumption.
Manual operation gives better control especially for worn/aged engine/carburettors.
Does away with expensive automatic choke components.

Fitting:
Fitting instructions enclosed, detailing all operations required.
Most kits can be fitted within 1 hour.
No special tools required.
All parts, including choke cable, included in kit

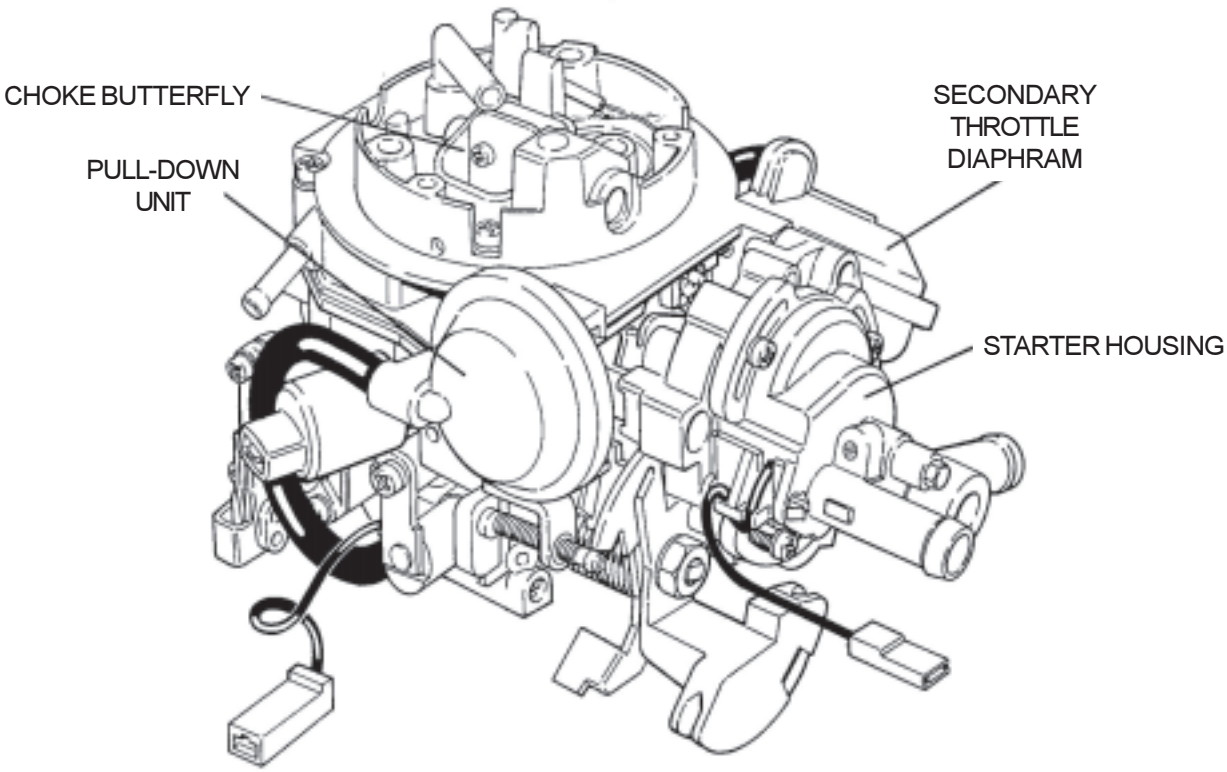

Contact Fuel Parts UK for prices and availability on manual choke conversion kits.
Please ensure you have full vehicle application details when calling for prices, including :
Make, Model, Year, Engine Size, type of Carburettor fitted.

Manual Choke Conversion Kits

Make	Model	Year	Carburettor	Part No.
AUDI				
AUDI	80 1.6	1975-79	Zenith 282	RCK08
AUDI	80/Coupe 1-6/1.8	1979-83	Zenith/Pierburg 1 B3	RCK08/34
AUDI	80 1.6/1.9	1979-83	Zenith 2B5	RCK08
AUDI	80/Coupe/Quattro 1.6/1.8	1983-86	Pierburg 2E2	RCK28
AUDI	80 Kat 1.6	1986-91	Pierburg 2EE	U/D
AUDI	100 1.6	1975-79	Zenith 2B2	RCK08
AUDI	100 1.6/2.2	1979-83	Zenith 2B5	RCK08
AUDI	100 1.8	1982-86	Zenith/Pierburg 1B3	RCK08/34
AUDI	100 1.8	1983-89	Pierburg 2E2	RCK28
AUDI	100/Avant 2.0	1976-78	Zenith 2B3	RCK08
AUDI	1 00/Avant 2.2	1978-79	Zenith 2B2	RCK08
BMW				
BMW	316/318/320/518	1975-80	Solex 32132 DIDTA	RCK08/04
BMW	316 1.8	1983-88	Pierburg 2BE	RCK36
BMW	320/A/520/A-6	1977-82	Solex 4A1	RCK29
BMW	518 1.8	1983-88	Pierburg 2BE	RCK36
BMW	525/528/630/728/730/A	1976-81	Solex 4A1	RCK29
CITROEN				
CITROEN	AX GT	1988-90	Solex CISAC/ZI	RCK33
CITROEN	BX/BX 14	1982-88	Solex CISAC/ZI	RCK33
CITROEN	BX 16	1982-88	Solex CISAC/ZI	RCK33
CITROEN	BX 16	1988-92	Solex 32-34 ZI	RCK33
CITROEN	BX 19 TRS/GT	1984-90	Solex CISAC	RCK33
CITROEN	BX 16	1982-88	Weber 32134 DRTC	RCK33
CITROEN	XM 2.0	1991-92	32-34/ZI	RCK33
FIAT				
FIAT	127	1977-84	Weber 32 ICEV	RCK18
FIAT	128 1100/1300	1971-79	Weber 32 ICEV	RCK18
FIAT	Panda 45	1979-84	Weber 32 ICEV	RCK18
FIAT	Uno 45/55	1982-92	Weber 32 ICEV	RCK18
FIAT	Ritmo/Strada 60/65/75	1977-82	Weber 34 ICEV	RCK18
FIAT	Ritmo/Strada 60	1982-87	Weber 32 ICEV	RCK18
FIAT	Ritmo/Strada 105TC	1982-83	Weber 34 DAT	RCK27
FIAT	XI/9 1.5	1978-89	Weber 34 DATR	RCK27
FIAT	131 1300/1400/1600	1977-84	Solex C32 TEIE	RCK24
FIAT	131 1300/1400/1600/2000	1978-84	Weber 32 ADF	RCK18
FIAT	131 Super 1300/1400/1600	1978-84	Solex C32 TEIE	RCK24
FIAT	131 Super 1300/1400/1600	1982-84	Weber 32 ADF	RCK18
FIAT	132 1600/1800	1976-81	Solex C32 TEIE	RCK24
FIAT	132 1600/1800	1976-81	Weber 32 ADF	RCK18
FIAT	Argenta 1600	1982-87	Solex C32 TEIE	RCK 24
FIAT	Argenta 1600/2000	1982-87	Weber 32 ADF	RCK18
FIAT	Croma 2.0 CHT	1986-92	Weber 34 DAT	RCK27
FORD				
FORD	Fiesta 1.3	1977-83	Weber 32 DFT	RCK27
FORD	Fiesta XR2	1981-87	Weber 32134 DFTA	RCK27
FORD	Fiesta 84 1.1/1.3	1983-89	Ford/Motorcraft VV	RCK05
FORD	Fiesta 1.1/1.4	1987-92	Weber TLD	RCK27
FORD	Fiesta XR2/1.6	1987-92	Weber TLD (2V)	RCK27
FORD	Escort 11 1.1/1.3	1975-80	Ford/Motorcraft 1V	RCK03/08
FORD	Escort 11 1.6	1975-80	Weber 32 DGAV	RCK01/18
FORD	Escort 81 1.1/1.3/1.6	1980-83	Ford/Motorcraft W	RCK05
FORD	Escort/Orion 1.1/1.3/1.6	1983-90	Ford/Motorcraft VV	RCK05
FORD	Escort/Orion 1.1/1.3/1.4	1989-90	Weber TLD[TLDM	RCK27
FORD	Escort XR3	1980-82	Weber 32 DFT	RCK27
FORD	Escort/Orion 1.6	1986-90	Weber TLD (2V)	RCK27
FORD	Escort/Orion 1.411.6	1990-92	Weber TLD (2V)	RCK27
FORD	Cortina/Taunus 1.3/1.6	1974-79	Ford/Motorcraft IV	RCK03/08
FORD	Cortina/Taunus 1.3/1.6	1979-82	Ford/Motorcraft W	RCK05

Manual Choke Conversion Kits

Make	Model	Year	Carburettor	Part No.
FORD	Cortina/Taunus 2.0	1975-82	Weber 32136 DGAV	RCK01/18
FORD	Cortina/Taunus 2.0/2.3 V6	1975-79	Solex 32135 EEIT	RCK07
FORD	CortinafTaunus 2.0/2.3 V6	1979-82	Solex 32135 EEIT	RCK07
FORD	Sierra 1.3/1.6	1982-87	Ford/Motorcraft VV	RCK05
FORD	Sierra 1.6/2.0	1982-86	Weber 32136 DGAV	RCK01/18
FORD	Sierra 1.6	1987-90	Weber 28130 (2V)	RCK27
FORD	Sierra 1.8	1983-88	Pierburg 2E3	RCK30
FORD	Sierra/Sapphire 1.8	1987-89	Pierburg 2E	RCK30
FORD	Sierra 2.0/Kat	1989-92	Weber TLD (2V)	RCK27
FORD	Sierra 2.012.3 V6	1982-84	Solex 35 EEIT	RCK07
FORD	Sierra/Granada/Scorpio 2.0	1985-89	DFTH-ISC	RCK35
FORD	Sierra/Granada/Scorpio 2.0	1989-92	Weber TLD	RCK27
FORD	Sierra/Granada/Scorpio 2.0	1989-92	Weber TLD (2V ISC)	U/D
FORD	Granada'85/Scorpio 1.8	1985-89	Pierburg 2E3	RCK30
FORD	Granada 2.0	1977-81	Weber 32136 DGAV	RCK01/18
FORD	Granada 2.0	1981-85	Weber 32136 DGAV	RCK01/18
FORD	Granada 2.3/2.8	1977-79	Solex 35138 EEIT	RCK07
FORD	Granada 2.3/2.8	1981-85	Solex 35 EEIT	RCK07
FORD	Granada 3.0	1975-77	Weber 38 DGAS	RCK01/18
FORD	Capri II/III 1.3/1.6	1974-78	Ford/Motorcraft 1V	RCK03
FORD	Capri II/III 1.3/1.6	1979-87	Ford/Motorcraft W	RCK05
FORD	Capri II/III 1.6/2.0	1976-87	Weber 32136 DGAV	RCK01/18
FORD	Capri II/III 3.0	1974-81	Weber 38 DGAS	RCK01/18
FORD commercial				
FORD commercial	Ford Transit 1.6/2.0	1977-83	Ford/Motorcratt 1V	RCK03
FORD commercial	Ford Transit 1.6/2.0	1983-91	Ford/Motorcraft VV	RCK05
JAGUAR				
JAGUAR	XJ6 2.8/3.4	1971-73	SU HS8 (x2) AED	RCK12
JAGUAR	XJ6 3.4/4.2	1975-86	SU HIF7 (x2) AED	RCK12
LANCIA				
LANCIA	Delta 1300/1500	1980-83	Weber 32 DAT	RCK18
LANCIA	Delta/Prisma 1300/1500/1600	1982-86	Weber 32 DAT	RCK18
LANCIA	Delta HF Turbo	1983-86	Weber 32 DAT	RCK18
LANCIA	Beta Saloon/Coupe	1976-88	Weber 32 DATR	RCK18
LANCIA	Beta/Trevi/HPE/ Coupe	1976-85	Weber 34 DAT/R	RCK18/27
LANCIA	Beta/Trevi/HPE/Coupe	1978-81	Weber 34 DAT	RCK18/27
LANCIA	Monte Carlo	1976-79	Weber 34 DATR	RCK18/27
MAZDA				
MAZDA	323 1.1/1.3/1.5	1985-89	Hitachi	RCK19
MAZDA	323 1.3/1.5/1.6	1987-92	Aisan/Solex 28132	RCK19
MERCEDES BENZ				
MERCEDES BENZ	190 (W201)/200 (W124)	1985-90	2E-E	U/D
MERCEDES BENZ	2801280C (W123)/(W116)	1980-81	Solex 4A1 32154	RCK29
MERCEDES BENZ	280S (W126)	1980-85	Solex 4A1 32154	RCK29
MITSUBISHI				
MITSUBISHI	Colt/Lancer 1200/1400/1600	1974-83	Mikuni 30132 DIDTA	RCK25
MITSUBISHI	Colt/Lancer 1200/1500	1984-86	Aisan28132	RCK25
MITSUBISHI	Colt/Lancer 1.2/1.3/1.5	1988-91	Aisan 28132	RCK25
MITSUBISHI	Celeste/Sigma 1600/2000	1975-81	Mikuni 28132 30132 DIDTA	RCK25
MITSUBISHI	Tredia/Cordia	1982-87	Aisan 26130 28132	RCK25
MITSUBISHI	Galant 2000 GTO/GSR	1975-79	Mikuni 28132 30132 DIDTA	RCK25
MITSUBISHI	Galant 160012000	1974-77	Mikuni 28132 30132 DIDTA	RCK25
MITSUBISHI	Galant 1.6/1.8	1984-87	Aisan 26130 28132	RCK25
MITSUBISHI	Galant 2.0	1984-87	Aisan 26130 28132	RCK25
MITSUBISHI	Space Wagon 1.812.0	1984-91	Aisan 26130	RCK25
MITSUBISHI	Shogun	1983-91	Mikuni 30132 DIDTA	RCK 25
NISSAN				
NISSAN	Micra 1.0/1.2	1983-92	Hitachi DCZ 306	RCK19
NISSAN	Cherry (N12) 1.5	1982-86	Hitachi DCF/DCZ	RCK19
NISSAN	Sunny (Bl 1) 1.5	1982-86	Hitachi DCF/DCG	RCK19

Make	Model	Year	Carburettor	Part No.
NISSAN	Sunny (B12/N13)	1986-90	Nikki	RCK19
NISSAN	Sunny 1.4/1.6/100 NX 1.6	1990-92	Hitachi	RCK19
NISSAN	Violet 140J/160J	1973-82	Nikki	RCK19
NISSAN	Stanza 1.611.8	1982-86	Nikki 21 E	RCK19
NISSAN	Bluebird (1601180B)	1972-84	Nikki	RCK19
NISSAN	Bluebird 1.8	1984-86	Nikki 21 E	RCK19
NISSAN	Bluebird 2.0	1984-86	Hitachi DCR 342	RCK19
NISSAN	Bluebird (T12) 1.6/1.8	1986-91	Hitachi 21E	RCK19
NISSAN	Bluebird (T12) 2.0	1986-90	Hitachi OCR 342	RCK19
NISSAN	Primera 1.6/Kat	1990-92	Hitachi	RCK19
NISSAN	Laurel C31 2.0/2.4	1981-86	Hitachi DAH 342	RCK19
NISSAN	Laurel (C32)	1986-89	Hitachi DCR 342	RCK19
NISSAN	240/260/280C/UKGT	1970-84	Hitachi DAF 342	RCK19
NISSAN	Prairie 1.5	1983-87	Hitachi DCZ 306	RCK19
NISSAN	Prairie 1.8	1983-89	Nikki 21 E	RCK19
NISSAN	Prairie 2.0	1986-92	Hitachi DCR 342	RCK19
NISSAN	Patrol 2.8	1982-89	Hitachi DAF 342	RCK19
PEUGEOT				
PEUGEOT	104	1975-79	Solex 32 TIMMIA	RCK33
PEUGEOT	104	1979-83	Solex 32135 TACIC	RCK33
PEUGEOT	205 1.6	1986-92	Weber 36 TLCI	RCK33
PEUGEOT	205/305/309 KAT	1987-92	Solex 34 TBIA	RCK33
PEUGEOT	304 1.3	1975-78	Solex 32135 TCICA	RCK33
PEUGEOT	305 1.5	1980-82	Solex 32135 TACIC	RCK33
PEUGEOT	305 1.9	1984-88	Solex 34134 ZI (CISAC)	RCK33
PEUGEOT	309 1.6	1989-92	Solex 34-34 ZI	RCK33
PEUGEOT	309 1.6	1986-90	Solex 34134 ZI (CISAC)	RCK33
PEUGEOT	405 1.6/1.9	1987-92	Solex 34-34 ZI	RCK33
PEUGEOT	505 2.0	1979-85	Zenith 35140 INAT	RCK08
PEUGEOT	505 2.0	1979-85	Solex 32135 TMIMA	RCK33
PEUGEOT	505 1.8/2.0	1985-90	Solex CISAC	RCK33
PEUGEOT	504/604 V6	1974-83	Solex 34 TBIA/35 CEEI	RCK33
PEUGEOT	605 2.0	1989-92	Solex 34134 ZI	RCK33
PROTON				
PROTON	Proton 1.3/1.5	1989-90	Aisan 28132	RCK25
RENAULT				
RENAULT	R16	1973-80	Weber 32 DAR	RCK18
RENAULT	R17	1976-89	Weber 32 DARA	RCK18
RENAULT	R18	1978-83	Solex 32135 EITA	RCK23
RENAULT	R16/Fuego	1978-87	Weber 32 DARA	RCK18
RENAULT	R20	1976-84	Weber 32 DARA	RCK18
RENAULT	R25	1984-92	Weber 28x361 32DARA	RCK18
RENAULT	R30	1976-84	Weber 38 DGAR	RCK01
RENAULT	R30 TS V6	1976-84	Solex 34 TBIA	RCK33
RENAULT	Espace	1984-91	Weber 32 DARA	RCK18
RENAULT	Alpine 31 0 V6 Atmos	1985-89	Solex 34 TBIA	RCK33
ROVER				
ROVER	Maestro/Montego 1.3/1.6/2.0	1983-92	SU HIF 44E	RCK11S
ROVER	Maestro/Montego 1.6/2.0	1989-92	SU HIF 44E (ERIC)	RCK11S
ROVER	Ambassador 2.0 HLS, VP	1982-84	SU HIF 44 (ASU)	RCK12
ROVER	216	1985-89	SU HIF 44E	RCK11S
ROVER	2000/2300/2600	1982-84	SU HIF 44 (x2) FASD	RCK17
ROVER	2000/2300/2600/3500	1985-86	SU HIF 44E (x2)	RCK11T
ROVER	3500 V8, P5, P6	1968-70	SU HS6 AED	RCK12
ROVER	3500	1982-84	Zenith 175 CDEF	RCK17
ROVER	820	1988-90	SU HIF 44E	RCK11S
SEAT				
SEAT	Ibiza/Malaga 1.2	1985-89	Pierburg 1B3	RCK08/34
SEAT	Ibiza/Malaga 1.5	1985-89	Weber 32 DST/DSTA	RCK27

Manual Choke Conversion Kits

Make	Model	Year	Carburettor	Part No.
SKODA				
SKODA	Favorit 1.1/1.3	1989-92	Pierburg 2E3	RCK 31
TALBOT				
TALBOT	Samba GLS/Cabriolet	1981-86	Solex 32135 TACIC	RCk 33
TALBOT	Horizon 1.5 AT	1978-86	Weber 36 DCA	RCK 18
TALBOT	Alpine Solara AT	1979-86	Weber 36 DCA	RCK 18
TALBOT	Minx/Rapier	1985-86	Weber 36 DCA	RCK 18
TALBOT	Chrysier 18012.0	1976-81	Weber 34 ADSDI	
TOYOTA				
TOYOTA	Starlet 1.3	1990-92	Aisan	RCK19
TOYOTA	Corolla 1600 Liftback	1977-84	Aisan	RCK19
TOYOTA	Corolla 1.3	1990-92	Aisan	RCK19
TOYOTA	Corolla 1.6/Kat	1987-92	Aisan	RCK19
TOYOTA	Tercel 1.3	1979-82	Aisan	RCK19
TOYOTA	Tercel/4WD	1982-88	Aisan	RCK19
TOYOTA	Carina 160011800	1980-84	Aisan	RCK19
TOYOTA	Carina 11 1.6	1984-88	Aisan	RCK19
TOYOTA	Camry 1.8	1982-86	Aisan	RCK19
TOYOTA	Celica Liftback ST/XT 19	76-82	Nikki	RCK19
TOYOTA	Cressida	1977-81	Nikki	RCK19
VAUXHALL-OPEL				
VAUXHALL-OPEL	VX/VX490	1976-80	Stromberg 175CD 2-SET	RCK10
VAUXHALL-OPEL	Nova 1.3	1985-90	Pierburg 2E3	RCK31
VAUXHALL-OPEL	Astra 1.3	1979-86	GM Varajet 1 1	RCK06
VAUXHALL-OPEL	Astra/Belmont 1.3	1984-90	Pierburg 2E3	RCK31
VAUXHALL-OPEL	Astra/Belmont 1.4	1989-91	Pierburg 2E3	RCK31
VAUXHALL-OPEL	Astra/Belmont 1.6	1986-88	GM Varajet 1 1	RCK06
VAUXHALL-OPEL	Astra 1.6	1986-91	Pierburg 2E3	RCK 31
VAUXHALL-OPEL	Astra 1.4	1991-92	Pierburg 2E3	RCK31
VAUXHALL-OPEL	Ascona/Cavalier/Manta 1.3	1980-84	GM Varajet 1 1	RCK06
VAUXHALL-OPEL	Cavalier/Ascona 1.3/1.6	1984-88	Pierburg 2E3	RCK 31
VAUXHALL-OPEL	Cavalier/Ascona/Manta 1.6	1975-81	Solex 32132 DIDTA	RCK 04
VAUXHALL-OPEL	Cavalier 1.6	1981-86	GM Varajet 1 1	RCK06
VAUXHALL-OPEL	Cavalier/Ascona/Manta 1.6	1975-78	Zenith 35140 INAT	RCK08
VAUXHALL-OPEL	Ascona/Manta 1.8/2.0	1982-88	GM Varajet 1 1	RCK06
VAUXHALL-OPEL	Rekord/Carlton 1.8/2.0	1982-88	GM Varajet 1 1	RCK06
VAUXHALL-OPEL	Cavalier 1.4/1.6/1.8	1988-92	Pierburg 2E3	RCK31
VAUXHALL-OPEL	Cavalier/4x4 1.8	1988-92	Pierburg 2E-E	U/D
VAUXHALL-OPEL	Cariton 1.8	1986-91	Pierburg 2E3	RCK31
VAUXHALL-OPEL	Carlton 1.8	1986-92	Pierburg 2E-E	U/D
VAUXHALL-OPEL	Senator/Monza/Royale	1978-83	Solex 4A1	RCK29
VAUXHALL-OPEL	Commodore-C/Viceroy	1978-83	Zenith 35140 INAT	RCK08
VOLKSWAGEN				
VOLKSWAGEN	1200/1300/1302/1303/S	1970-86	Solex PICT 314	RCK09
VOLKSWAGEN	Polo/Derby 1.05/1.1/1.3	1981-85	Solex 31 PIC	RCK08
VOLKSWAGEN	Polo/Derby/Coupe 1.3	1982-91	Pierburg 2E3	RCK32
VOLKSWAGEN	Polo/Derby/Golf/Jetta 1.05	1982-91	Pierburg 1B3	RCK34
VOLKSWAGEN	Polo/Derby/Golf/Jetta 1.05	1985-91	Weber 32 TLA	RCK22
VOLKSWAGEN	Golf 1.05/1.1	1983-85	Solex 31 PIC	RCK08
VOLKSWAGEN	Golf/Jetta/Scirocco 1.3	1979-83	Solex 34 PIC	RCK08
VOLKSWAGEN	Golf/Jetta/Scirocco 1.3	1983-92	Pierburg 2E3	RCK32
VOLKSWAGEN	Golf/Scirocco 1.1/1.5/1.6	1974-79	Solex 31134 PICT/PICS	RCK08
VOLKSWAGEN	Golf/Jetta/Scirocco 1.5	1979-84	Zenith 1B3	RCK34
VOLKSWAGEN	Golf/Jetta/Scirocco 1.611.8	1983-92	Pierburg 2E2	RCK28
VOLKSWAGEN	Golf/Jetta Kat 1.6	1987-92	Pierburg 2EE	U/D
VOLKSWAGEN	Scirocco TS 1.5/1.6	1975-79	Zenith 2B2	RCK08
VOLKSWAGEN	Scirocco TS 1.6	1979-83	Zenith 2B5	RCK08
VOLKSWAGEN	Passat 1.3/1.5/1.6	1972-79	Solex 35 PDSIT	RCK08
VOLKSWAGEN	Passat 1.5	1972-75	Solex 32135 DITDA	RCK08
VOLKSWAGEN	Passat 1.6	1975-79	Zenith 2B2	RCK0

Manual Choke Conversion Kits

Make	Model	Year	Carburettor	Part No.
VOLKSWAGEN	Santana 1.6	1979-83	Pierburg 1B3	RCK34
VOLKSWAGEN	Santana 1.6/1.9	1979-83	Zenith 2B5	RCK08
VOLKSWAGEN	Santana 1.6/1.8	1983-88	Pierburg 2E2	RCK28
VOLKSWAGEN	Passat Kat 1.6	1987-88	Pierburg 2EE	U/D
VOLKSWAGEN	Passat 1.6/Kat	1988-92	Pierburg 2E3	RCK32
VOLVO				
VOLVO	Volvo 740	1984-90	Pierburg 2B5	RCK08
YUGO				
YUGO	45165A/Tempo	1988-92	Weber C740	RCK27

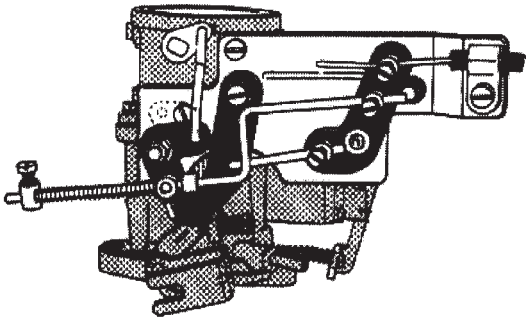

RCK02

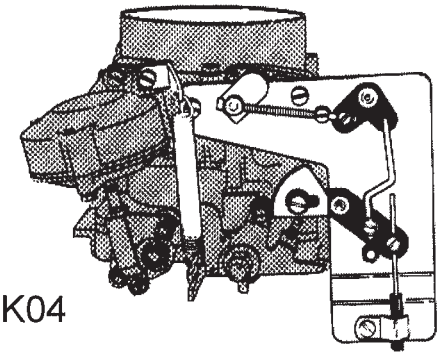

RCK04

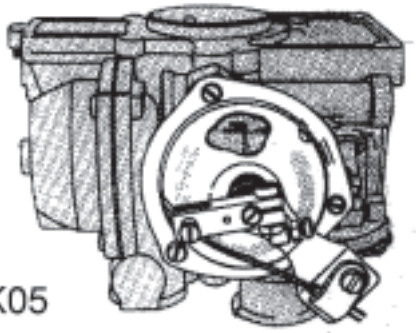

RCK05

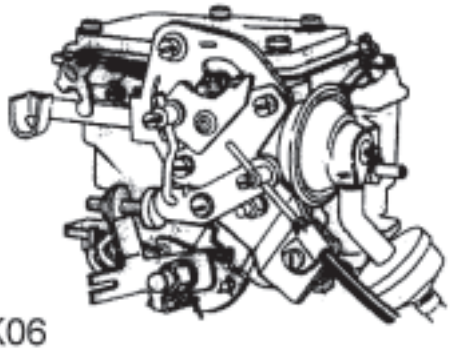

RCK06

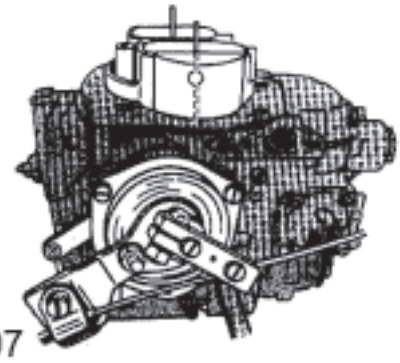

RCK07

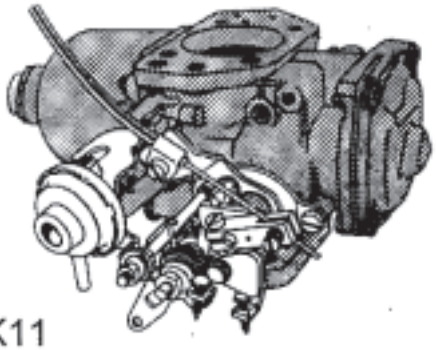

RCK11

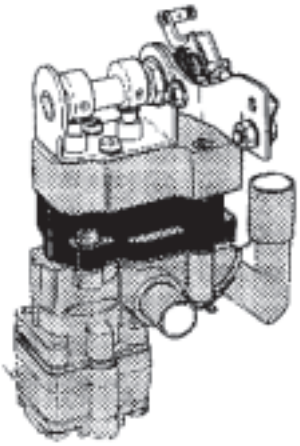

RCK12

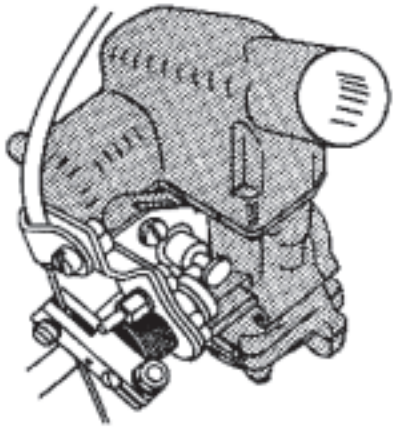

RCK17

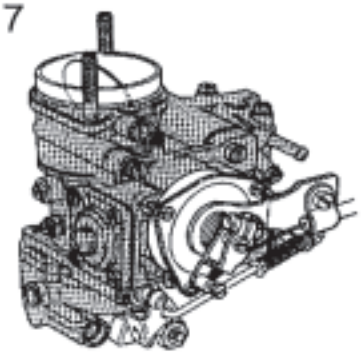

RCK18

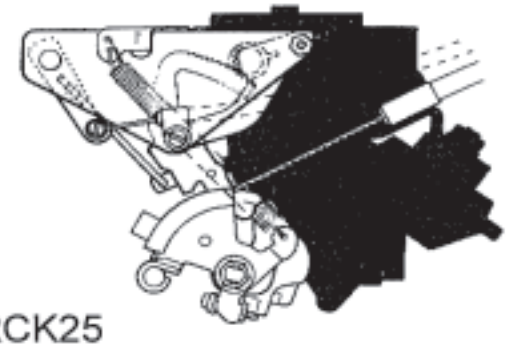

RCK25

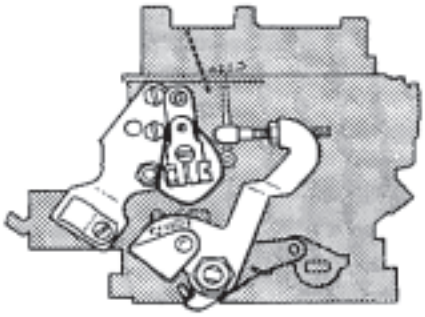

RCK27

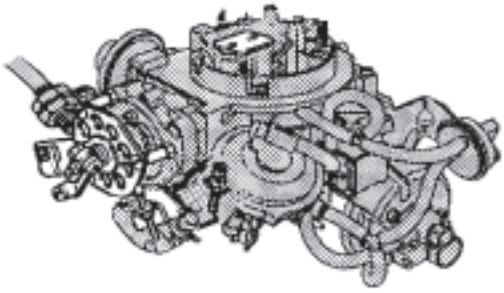

RCK28

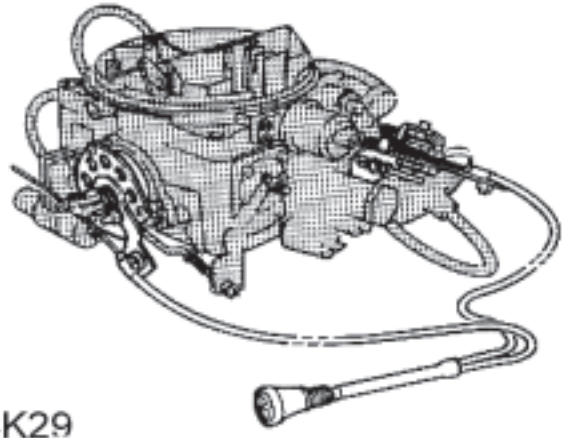

RCK29

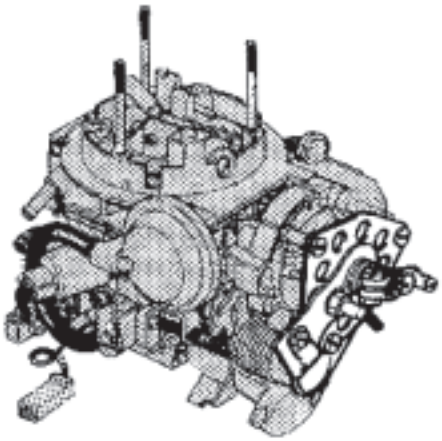

RCK30

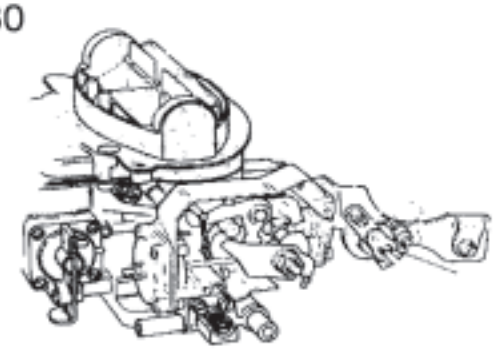

RCK33

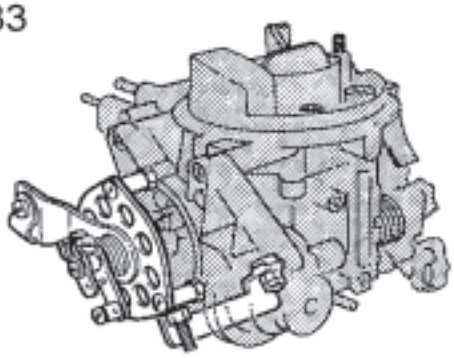

RCK34

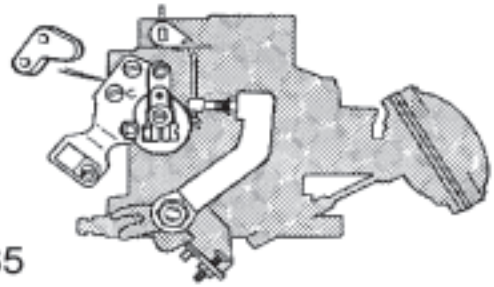

RCK35